EXHIBIT #6

Transportation Impact Analysis

HERZL-NER TAMID JEWISH DAY SCHOOL

May 2024

Prepared by:

12131 113th Avenue NE, Suite 203
Kirkland, WA 98034-7120
Phone: 425-821-3665
Fax: 425-825-8434
www.transpogroup.com

1.23278.00

© 2024 Transpo Group

Table of Contents

Introduction **1**
Project Description 1
Study Area 1

Existing Conditions **4**
Roadway Network 4
Non-Motorized Facilities 4
Transit Service 4
Existing Volumes 5
Existing Traffic Operations 8
Traffic Safety 8

Future Without-Project Conditions **10**
Planned Transportation Improvements 10
Future Traffic Volume Forecasts 10
Future Traffic Operations 13

Project Impacts **14**
Trip Generation 14
Trip Distribution and Assignment 14
Future With-Project Traffic Volumes 15
Future With-Project Traffic Operations 21
Parking Demand 22

Findings and Recommendations **23**

Appendix

Appendix A: Traffic Counts
Appendix B: LOS Definitions
Appendix C: LOS Worksheets
Appendix D: Trip Generation Calculations

Figures

Figure 1. Site Vicinity and Study Intersections 2
Figure 2. Site Plan 3
Figure 3. Existing School AM and PM Peak Hour Traffic Volumes 6
Figure 4. Existing Weekday PM Peak Hour Traffic Volumes 7
Figure 5. Future (2026) Without-Project School AM and PM Peak Hour Traffic Volumes 11
Figure 6. Future (2026) Without-Project Weekday PM Peak Hour Traffic Volumes 12
Figure 7. School Trip Distribution and Assignment 16
Figure 8. Office Trip Distribution and Assignment 17
Figure 9. Total Trip Distribution and Assignment 18
Figure 10. Future (2026) With-Project School AM and PM Peak Hour Traffic Volumes 19
Figure 11. Future (2026) With-Project Weekday PM Peak Hour Traffic Volumes 20

Tables

Table 1. Existing Weekday AM and PM Peak Hour Intersection Operations 8

Table 2. Three-Year Collision Summary (2020-2022) 9
Table 3. Future Without-Project Peak Hour Intersection Operations 13
Table 4. Estimated Trip Generation 14
Table 5. Weekday AM & PM Peak Hour Trip Distribution by Land Use 15
Table 6. Future Without-Project and With-Project Peak Hour LOS Summary 21
Table 7. Parking Demand by Hour 22

Introduction

The purpose of this transportation impact analysis (TIA) is to identify potential traffic-related impacts associated with the proposed private school development on the Herzl (HNT) property in Mercer Island, Washington. As necessary, mitigation measures are identified that would offset or reduce significant impacts.

Project Description

The proposed project location is at 3700 E Mercer Way, located east of E Mercer Way near the I-90 ramps on Mercer Island as shown in Figure 1. The proposed project includes approximately 14,051 gross square feet of private school and 12,300 gross square feet of general office. The private school will enroll up to 150 students in the PK-8 grade levels. The private school space would be occupied by the Jewish Day School (JDS), which is currently located in Bellevue and intends to move to the proposed site. Vehicular access to the project site would be provided along the northern site limits where a driveway would be provided onto Frontage Road, as illustrated in Figure 1. A preliminary site plan is shown in Figure 2. The school is projected to be open in 2026.

Study Area

The analysis focuses on the school AM and PM peak hours (7:00 to 9:00 a.m. and 3:00 to 4:00 p.m., respectively) as well as the weekday PM peak period (4:00 to 6:00 p.m.) operations at six intersections. These periods represent the highest cumulative total traffic for the adjacent street system as well as the highest time periods for the school providing a conservative timeframe for level of service (LOS) analysis. The study intersections include (see also Figure 1):

1. E Mercer Way/SE 40th Street
2. E Mercer Way/Frontage Road
3. E Mercer Way/SE 36th Street/I-90 EB On Ramp
4. E Mercer Way/I-90 EB Off Ramp
5. E Mercer Way/I-90 WB Ramps

In addition to the above study intersections, the proposed site access along Frontage Road was analyzed for purposes of future trip generation calculations.

Site Vicinity and Study Intersections

Herzl Private School

FIGURE
1

transpogroup

Apr 18, 2024 - 9:52am jeffreyc M:\23\1.23278.00 - Herzl Private School\Graphics\DWG\Graphics_23278.dwg Layout: Site Vicinity

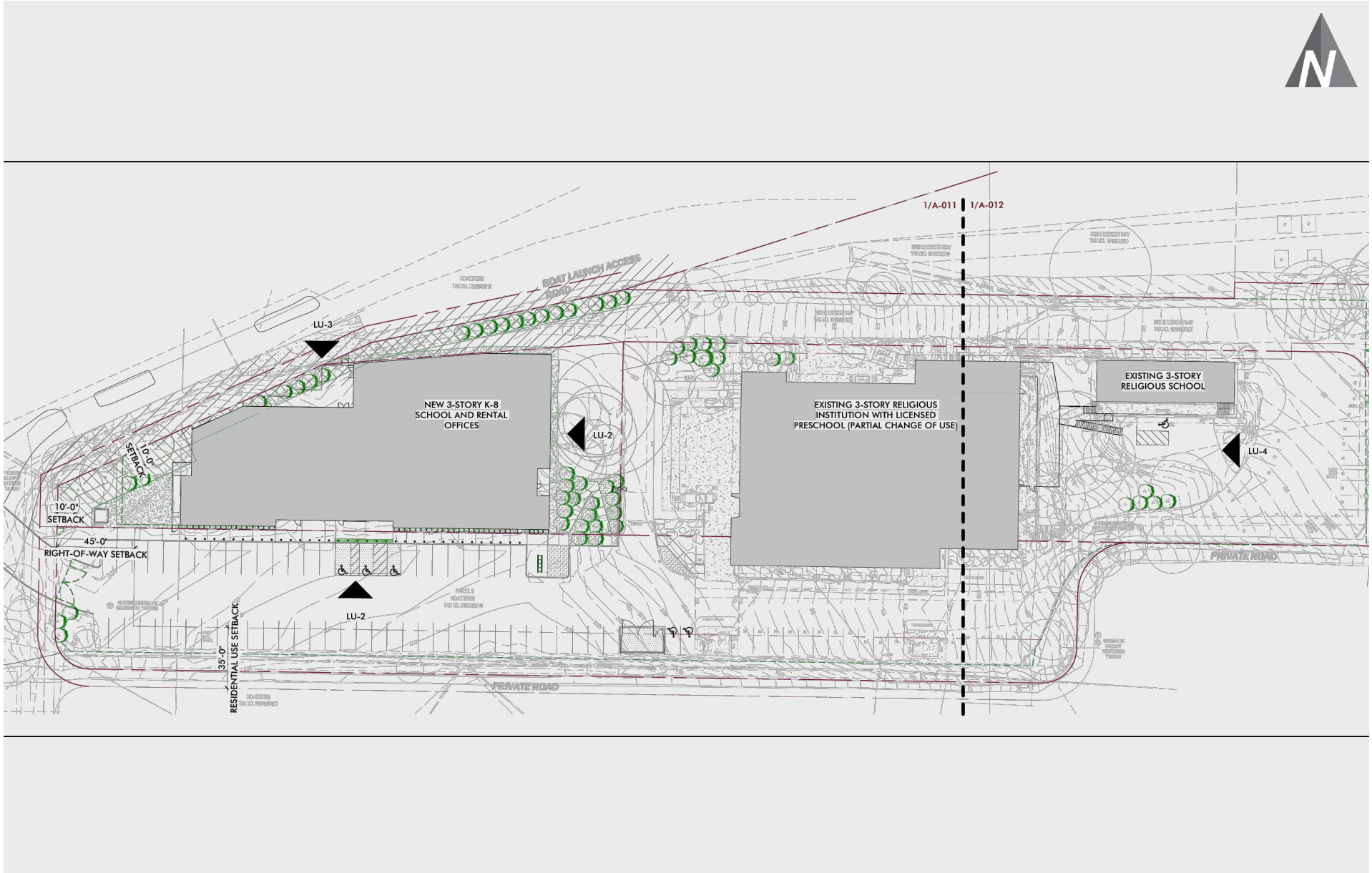

Site Plan

Herzl Private School

FIGURE
2

transpogroup

Apr 18, 2024 - 9:53am jeffreyc M:\23\1.23278.00 - Herzl Private School\Graphics\DWG\Graphics_23278.dwg Layout: Site Plan

Existing Conditions

This section describes existing condition within the identified study area. Characteristics are provided for the roadway network, non-motorized facilities, transit service, existing traffic volumes, traffic operations, and traffic safety.

Roadway Network

The project site is located in northeast Mercer Island, and is bounded by E Mercer Way to the west, Frontage Road to the north, and SE 40th Street to the south. The major roadways within the study area include:

SE 36th Street is a two-lane roadway classified as a secondary arterial. This roadway provides east-west access with sidewalks located on the south side and a center two-way left-turn lane. SE 36th Street serves as a connection to eastbound and westbound Interstate 90 (I-90) with freeway access at the N Mercer Way and E Mercer Way intersections. The posted speed limit is 30 miles per hour (mph) in the vicinity of the project.

E Mercer Way is a two-lane roadway classified as a collector arterial with sidewalks. This roadway provides north-south access and a connection to I-90 with a freeway connection at the SE 36th Street intersection. The posted speed limit is 30 mph in the vicinity of the project.

SE 40th Street is an east-west residential roadway located south of the project site area. The road provides one lane in each direction and no sidewalks. The posted speed limit is 25 mph in the vicinity of the project.

Frontage Road is an east-west city facility roadway located north of the project site area. The road provides one lane in each direction and no sidewalks. Access to the project site is provided via a driveway along the south side of Frontage Road.

Non-Motorized Facilities

Sidewalks are provided along SE 36th Street and E Mercer Way with crosswalks located at major intersections allowing safe pedestrian mobility throughout the area. Signalized crossings are provided at the SE 36th Street/E Mercer Way intersection, as well as the E Mercer Way/I-90 WB ramps intersection. Unsignalized crossings are located along E Mercer Way at the north and south legs of the Jewish Community Center Access Road intersection. Additional pedestrian circulation near the site is discussed below.

No marked bicycle facilities are provided along roadways in the project vicinity, but E Mercer Way and SE 36th Street are considered bicycle-friendly roadways.

Transit Service

No public transit routes utilize study area roadways, including E Mercer Way, SE 36th Street, and SE 40th Street. The nearest transit stop to the project site is located at the N Mercer Way/Fortuna Drive intersection approximately 0.6 miles northwest of the project site which is served by King County Metro Route 204 Dial-a-Ride Transit (DART) service providing service between North Mercer Island and the Mercer Village Shopping Center. DART service offers both fixed and variable routing on N Mercer Way between the hours of 9 am and 3 pm on weekdays, and 9 am to 7 pm on Saturdays.

The East Link is a planned Sound Transit Link Light Rail extension that would provide service from Downtown Seattle to Mercer Island to Redmond. The segment of the East Link between Bellevue and Redmond is expected to open in April 2024, with the remainder of the link extension, including the segment running through Mercer Island, being scheduled to open in 2025.

Although limited public service is available under existing conditions, the JDS does provide bus service for families of the school. During the 2023-2024 school year, the JDS provided four buses, with a total of 25 students using the bus.

Existing Volumes

Traffic counts were collected at each study intersection including the site access in March 2024 for the school AM and PM peaks and the weekday PM peak hours and are summarized in Figure 3 and Figure 4, respectively. These counts included both traffic and pedestrian volumes. Detailed intersection traffic and pedestrian counts are provided in Appendix A.

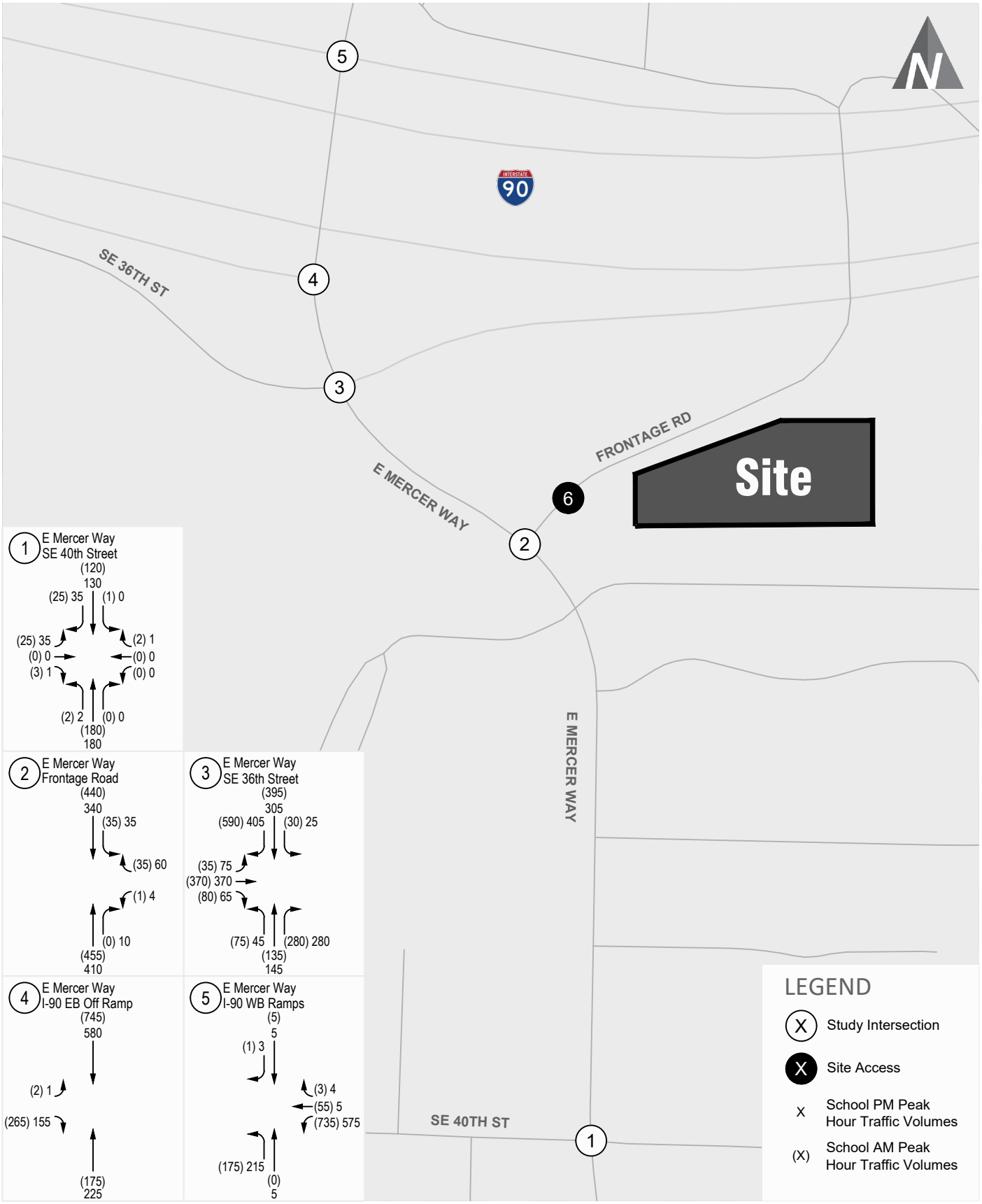

Existing (2024) School Peak Hour Traffic Volumes

Herzl Private School

transpogroup

FIGURE 3

Apr 29, 2024 - 9:47am jeffreyc M:\23\1.23278.00 - Herzl Private School\Graphics\DWG\Graphics_23278.dwg Layout: Existing School

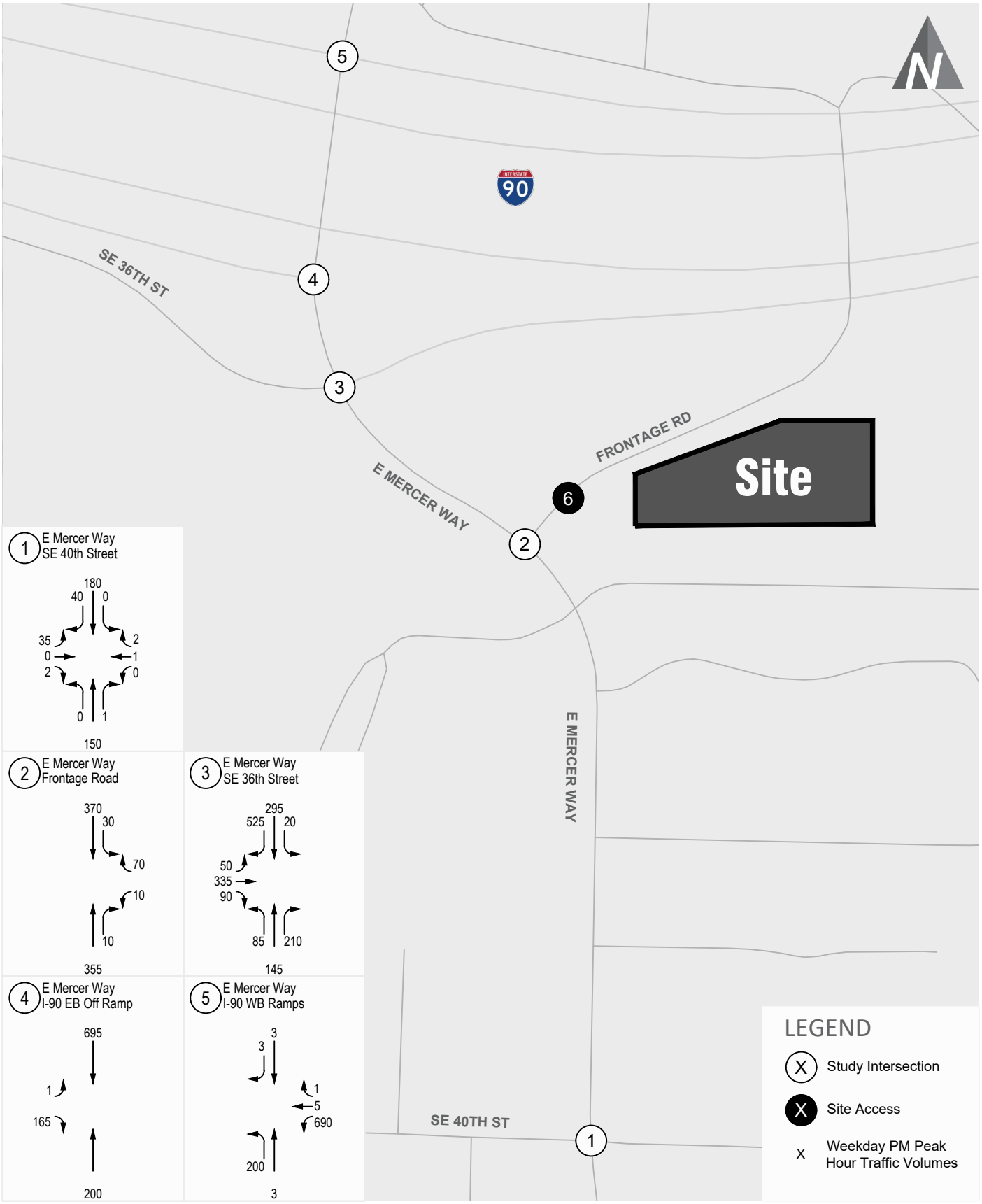

Existing (2024) PM Peak Hour Traffic Volumes

Herzl Private School

transpogroup

FIGURE 4

Apr 29, 2024 - 9:47am jeffreyc M:\23\1.23278.00 - Herzl Private School\Graphics\DWG\Graphics_23278.dwg Layout: Existing PM

Existing Traffic Operations

The operational characteristics of an intersection are determined by calculating the intersection's level of service (LOS). The intersection as a whole and its individual turning movements can be described alphabetically with a range of levels of service (A through F), with LOS A indicating free-flow traffic and LOS F indicating extreme congestion and long vehicle delays. LOS is measured in average control delay per vehicle and is typically reported for the intersection as a whole at signalized intersections and for the approach or turning movement that experiences the most delay at two-way stop-controlled intersections. Control delay is defined as the combination of initial deceleration delay, queue move-up time, stopped delay, and final acceleration delay. Appendix B provides a more detailed explanation of intersection LOS criteria.

Existing levels of service and delays were calculated using the *Highway Capacity Manual* (*HCM*) *7th Edition* methodology. *Synchro* (version 12) was used for these calculations. For the operations analysis of existing conditions at the signalized study intersections , signal timing and phasing information was obtained from the Washington State Department of Transportation (WSDOT) and input into *Synchro*. Existing peak hour factors and heavy vehicle percentages were used for the operations analysis. The City of Mercer Island has adopted a standard of LOS D or better for City intersections.

Table 1 shows the school AM and PM peak hour and weekday PM peak hour existing traffic operations. Detailed intersection LOS worksheets are contained in Appendix C.

Table 1. Existing Weekday AM and PM Peak Hour Intersection Operations

	School AM Peak Hour			School PM Peak Hour			Weekday PM Peak Hour		
Intersection	**LOS[1]**	**Delay[2]**	**WM[3]**	**LOS**	**Delay**	**WM**	**LOS**	**Delay**	**WM**
1. E Mercer Way/SE 40th Street	B	11	EB	B	12	EB	B	12	EB
2. E Mercer Way/Frontage Rd	B	13	WB	B	12	WB	B	13	WB
3. E Mercer Way/SE 36th Street/I-90 EB On Ramp[4]	B	20	-	C	21	-	B	19	-
4. E Mercer Way/I-90 EB Off Ramp[4]	B	11	-	A	8	-	A	8	-
5. E Mercer Way/I-90 WB Ramps	B	16	-	B	13	-	B	13	-

1. Level of Service (A – F) as defined by the Highway Capacity Manual (TRB, 7th Edition).
2. Average delay per vehicle in seconds.
3. Worst movement (WM) reported for stop controlled intersections. EB = eastbound approach; and WB = westbound approach.
4. Traffic operations ran in HCM 2000 due to clustered intersection

As shown in Table 1, all study intersections currently operate at LOS D or better during the peak periods, meeting the City of Mercer Island's LOS D standard.

Traffic Safety

Washington State Department of Transportation (WSDOT) provided the collision data for the most recent three-year period for intersections and roadway segments within the City of Mercer Island. Specifically, the data was summarized between January 1, 2020 and December 31, 2022. Table 2 provides a summary of collision history within the study area.

Table 2. Three-Year Collision Summary (2020-2022)

Location	Number of Collisions			Total	Annual Average	Collisions per MEV[1]
	2020	2021	2022			
1. E Mercer Way/SE 40th St	0	1	0	1	0.33	0.22
2. E Mercer Way/Frontage Rd	0	0	1	1	0.33	0.11
3. E Mercer Way/SE 36th St/I-90 EB On Ramp	1	0	1	2	0.67	0.10
4. E Mercer Way/I-90 EB Off Ramp	0	0	0	0	0	0.00
5. E Mercer Way/I-90 WB Ramps	0	2	0	2	0.67	0.20

Source: WSDOT, 2023
Under 23 U.S. Code § 409 and 23 U.S. Code § 148, safety data, reports, surveys, schedules, lists compiled or collected for the purpose of identifying, evaluating, or planning the safety enhancement of potential crash sites, hazardous roadway conditions, or railway-highway crossings are not subject to discovery or admitted into evidence in a Federal or State court proceeding or considered for other purposes in any action for damages arising from any occurrence at a location mentioned or addressed in such reports, surveys, schedules, lists, or data.
1. Million Entering Vehicles

Within the analysis time period, the highest number of collisions occurred at the E Mercer Way/SE 36th Street/I-90 EB On-Ramp intersection and the E Mercer Way/I-90 WB Ramps intersection, with an average of less than one collision per year. Of the 6 collisions that occurred in the study area, 4 resulted in property damage only, and 2 resulted in some form of injury. Both injuries occurred at the E Mercer Way/SE 36th Street/I-90 EB On Ramp intersection, with one collision being an approach turn collision and one collision involving a cyclist. Both collisions resulted in only minor injuries, and do not represent enough of a pattern to establish a safety concern at the intersection.

By incorporating the traffic volume at the intersection, the rate of collisions per million entering vehicles (MEV) allows a uniform standard for evaluating accident history. Generally, a collision rate at intersections greater than 1.0 collisions per MEV is considered higher than normal. Based on this threshold, there were no safety issues identified at the study intersections.

Future Without-Project Conditions

This section describes the future (2026) traffic conditions during school AM and PM peaks and the weekday PM peak hours without the addition of project traffic. The following describes planned transportation improvements, traffic volume forecasts, and traffic operations.

Planned Transportation Improvements

Based on a review of the City of Mercer Island's 2024-2029 Six-Year Transportation Improvement Program (TIP), there are no planned improvements in the study area that are anticipated to change intersection or roadway capacities by altering intersection traffic control or geometrics. Repaving of sections of SE 36th Street and East Mercer Way within the study area are anticipated to take place in 2025 and 2027, respectively. Neither of these projects are expected to change the existing roadway conditions within the study area.

Future Traffic Volume Forecasts

Future (2026) without-project traffic volumes were forecasted using an annual background growth rate of 0.5 percent. These volumes were forecasted using the information from the City of Mercer Island's background growth rate for areas outside the Town Center boundary, as defined by the City of Mercer Island Comprehensive Plan. Future (2026) without-project traffic volumes are shown in Figure 5 and Figure 6 for the School AM and PM peak hours and the weekday PM peak hour, respectively.

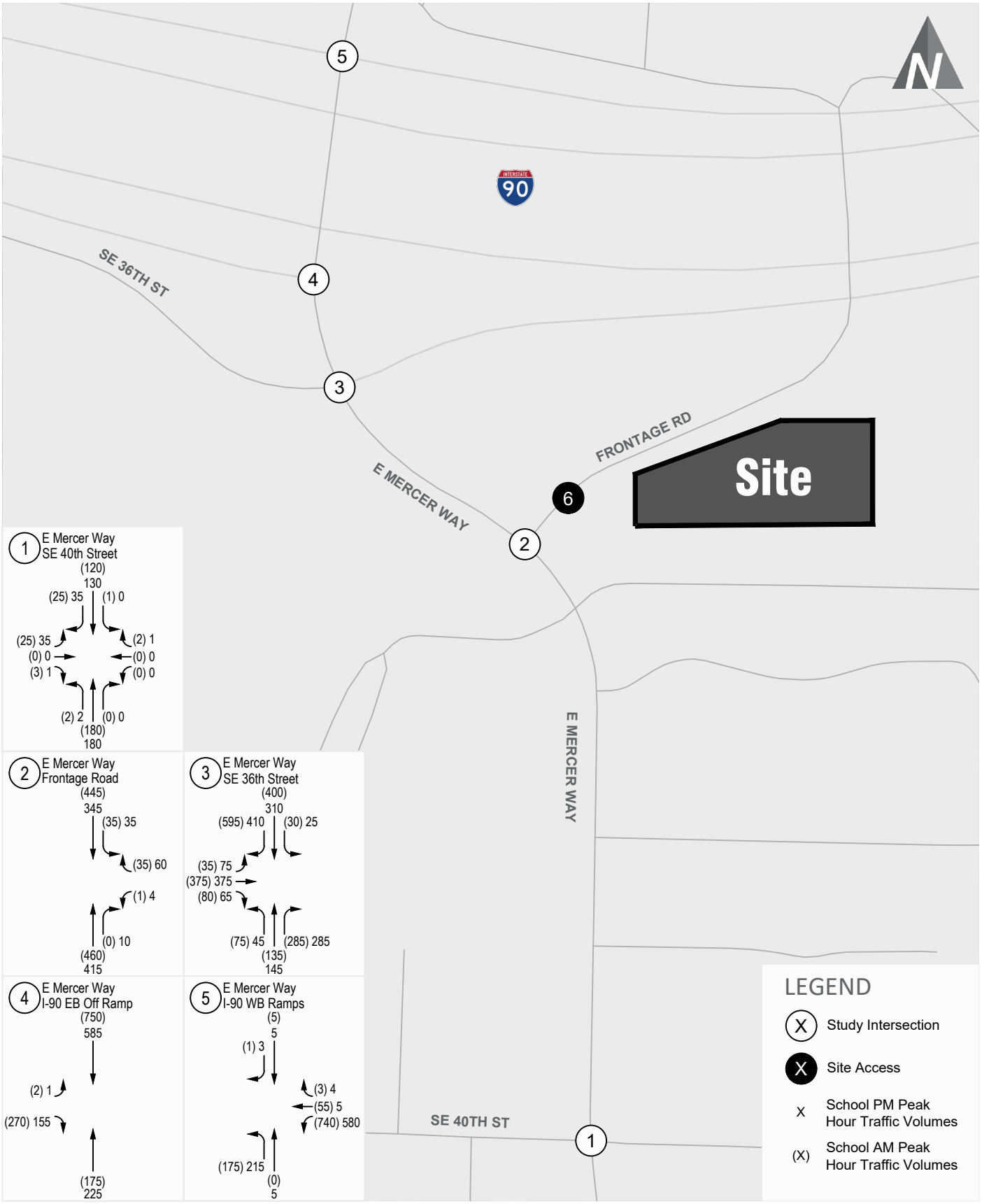

Future (2026) Without-Project School Peak Hour Traffic Volumes

FIGURE 5

Herzl Private School

transpogroup

Apr 29, 2024 - 9:48am jeffreyc M:\23\1.23278.00 - Herzl Private School\Graphics\DWG\Graphics_23278.dwg Layout: Baseline School

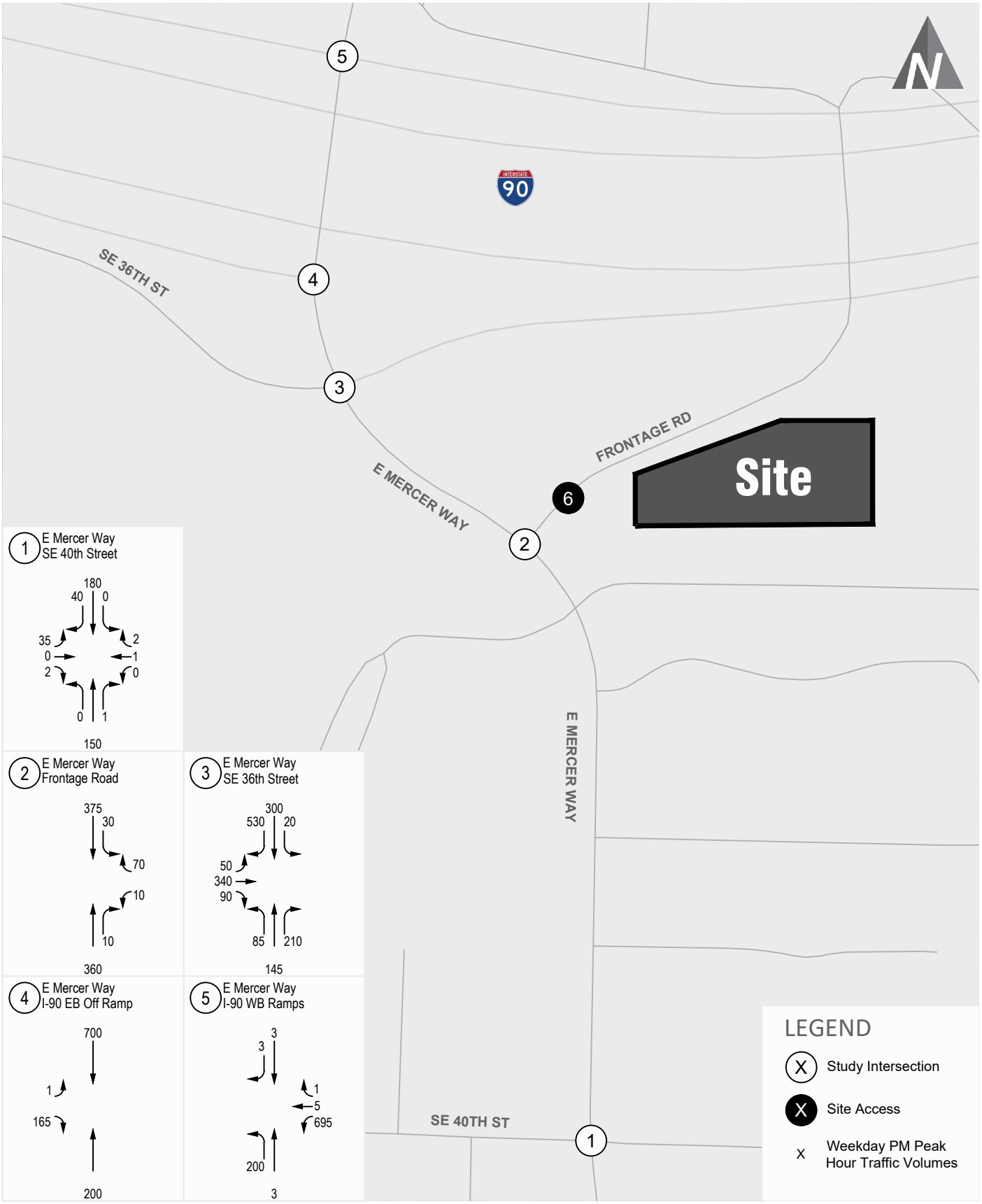

Future (2026) Without-Project PM Peak Hour Traffic Volumes

FIGURE 6

Herzl Private School

transpogroup

Apr 29, 2024 - 9:48am jeffreyc M:\23\1.23278.00 - Herzl Private School\Graphics\DWG\Graphics_23278.dwg Layout: Baseline PM

Future Traffic Operations

Future intersection operations were evaluated for the future (2026) without-project conditions. Intersection LOS was calculated at the study intersections using the LOS method described previously. Table 3summarizes 2026 school AM and PM peaks and the weekday PM peak hours LOS. The detailed LOS worksheets are included in Appendix C.

Table 3. Future Without-Project Peak Hour Intersection Operations

	Existing (2024)			Future (2026) Without-Project		
Intersection	**LOS[1]**	**Delay[2]**	**WM[3]**	**LOS**	**Delay**	**WM**
School AM Peak Hour						
1. E Mercer Way/SE 40th Street	B	11	EB	B	11	EB
2. E Mercer Way/Frontage Rd	B	13	WB	B	12	WB
3. E Mercer Way/SE 36th Street/I-90 EB On Ramp[4]	B	20	-	C	20	-
4. E Mercer Way/I-90 EB Off Ramp[4]	B	11	-	B	11	-
5. E Mercer Way/I-90 WB Ramps	B	16	-	B	16	-
School PM Peak Hour						
1. E Mercer Way/SE 40th Street	B	12	EB	B	12	EB
2. E Mercer Way/Frontage Rd	B	12	WB	B	12	WB
3. E Mercer Way/SE 36th Street/I-90 EB On Ramp[4]	C	21	-	C	21	-
4. E Mercer Way/I-90 EB Off Ramp[4]	A	8	-	A	8	-
5. E Mercer Way/I-90 WB Ramps	B	13	-	B	13	-
Weekday PM Peak Hour						
1. E Mercer Way/SE 40th Street	B	12	EB	B	12	EB
2. E Mercer Way/Frontage Rd	B	13	WB	B	13	WB
3. E Mercer Way/SE 36th Street/I-90 EB On Ramp[4]	B	19	-	B	19	-
4. E Mercer Way/I-90 EB Off Ramp[4]	A	8	-	A	8	-
5. E Mercer Way/I-90 WB Ramps	B	13	-	B	13	-

1. Level of Service (A – F) as defined by the Highway Capacity Manual (TRB, 7th Edition).
2. Average delay per vehicle in seconds.
3. Worst movement (WM) reported for side-street stop controlled intersections. EB = eastbound approach; and WB = westbound approach.
4. Traffic operations ran in HCM 2000 due to clustered intersection

As shown in Table 3, all study intersections currently operate at LOS C or better during the peak periods, meeting the City of Mercer Island's LOS D standard with 1 second or less additional delay being added in without-project conditions relative to existing conditions.

Project Impacts

This section of the analysis documents project-generated impacts on the surrounding roadway network and at the study intersections. First, peak hour traffic volumes are estimated, distributed, and assigned to adjacent roadways and intersection within the study area. Next, 2026 volumes are projected and potential impact to traffic volumes, traffic operations and non-motorized facilities are identified.

Trip Generation

Project trip generation estimates were developed for the project based on information contained in the Institute of Transportation Engineers (ITE) *Trip Generation* (11th Edition, 2021). Trip Generation is a nationally recognized and locally accepted method for determining trip generation for private and public developments. Trips were calculated using the Private School (K-8) (LU #530) and General Office (ITE LU #710) land uses. The following paragraphs summarize the preliminary trip generation estimate for the remaining proposed uses.

Table 4summarizes the project's estimated trip generation for weekday AM peak hour, PM peak hour, and school peak hour time periods. School peak hour trip generation is based on the PM peak hour of generator for the private school land use. Detailed trip generation calculation worksheets are provided in Appendix D.

Table 4. Estimated Trip Generation

		School AM Peak Hour			School PM Peak Hour			Weekday PM Peak Hour		
Land Use	**Size**	**In**	**Out**	**Total**	**In**	**Out**	**Total**	**In**	**Out**	**Total**
Proposed Uses										
Private School (LU #530)	150 students	71	55	126	44	50	94	18	21	39
General Office (LU #710)	12,300 sf	25	3	28	7	8	15	5	24	29
Total		**96**	**58**	**154**	**51**	**58**	**109**	**23**	**45**	**68**

Trip Distribution and Assignment

Vehicular trip distribution for the private school land use is based on information provided by the JDS regarding the ZIP code locations where students currently attending the school lived. It is assumed that the trip distribution of the proposed private school will match the current trip distribution at JDS. A separate primary vehicular trip distribution was determined for office trips consistent with Mercer Island General Traffic Impact Analysis Requirements. Vehicular trip distribution for the office land use is based on the U.S. Census Bureau's *OnTheMap* tool. *OnTheMap* is a web-based mapping and reporting application, which shows where workers are employed and where they live based on census data. The school and office trip distributions are provided in Attachment B. Table 5 summarizes the general primary trip distribution patterns assumed by land use.

Table 5. Weekday AM & PM Peak Hour Trip Distribution by Land Use

Location	School Trips	Office Trips
East of Mercer Island	65%	45%
West of Mercer Island	25%	40%
Within Mercer Island	10%	15%

Primary project trips for each site use were assigned to the study intersections based on these general travel patterns. The resulting distribution and assignment for the school and office land uses are shown in Figure 7 and Figure 8, respectively. The combined trip assignment for the two land uses is shown in Figure 9.

Future With-Project Traffic Volumes

The project traffic volumes were added to the future baseline 2026 traffic volumes to form the basis of the with-project analysis. Figure 10 and Figure 11 show the school AM and PM peak and the weekday PM peak hour traffic volumes at the study intersections.

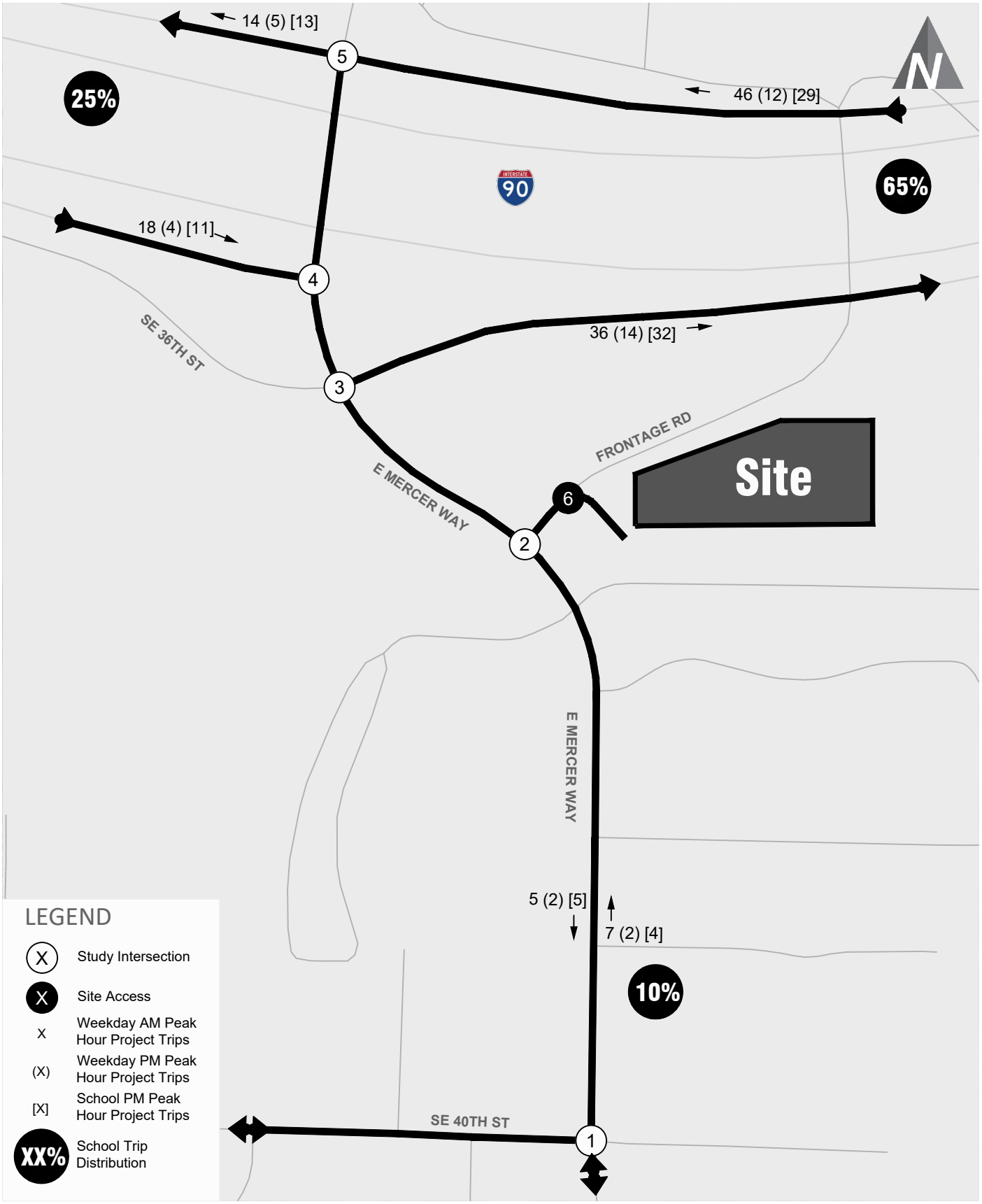

School Trip Distribution and Assignment

Herzl Private School

FIGURE 7

transpogroup

Apr 18, 2024 - 9:54am jeffreyc M:\23\1.23278.00 - Herzl Private School\Graphics\DWG\Graphics_23278.dwg Layout: School Dist & Assignment

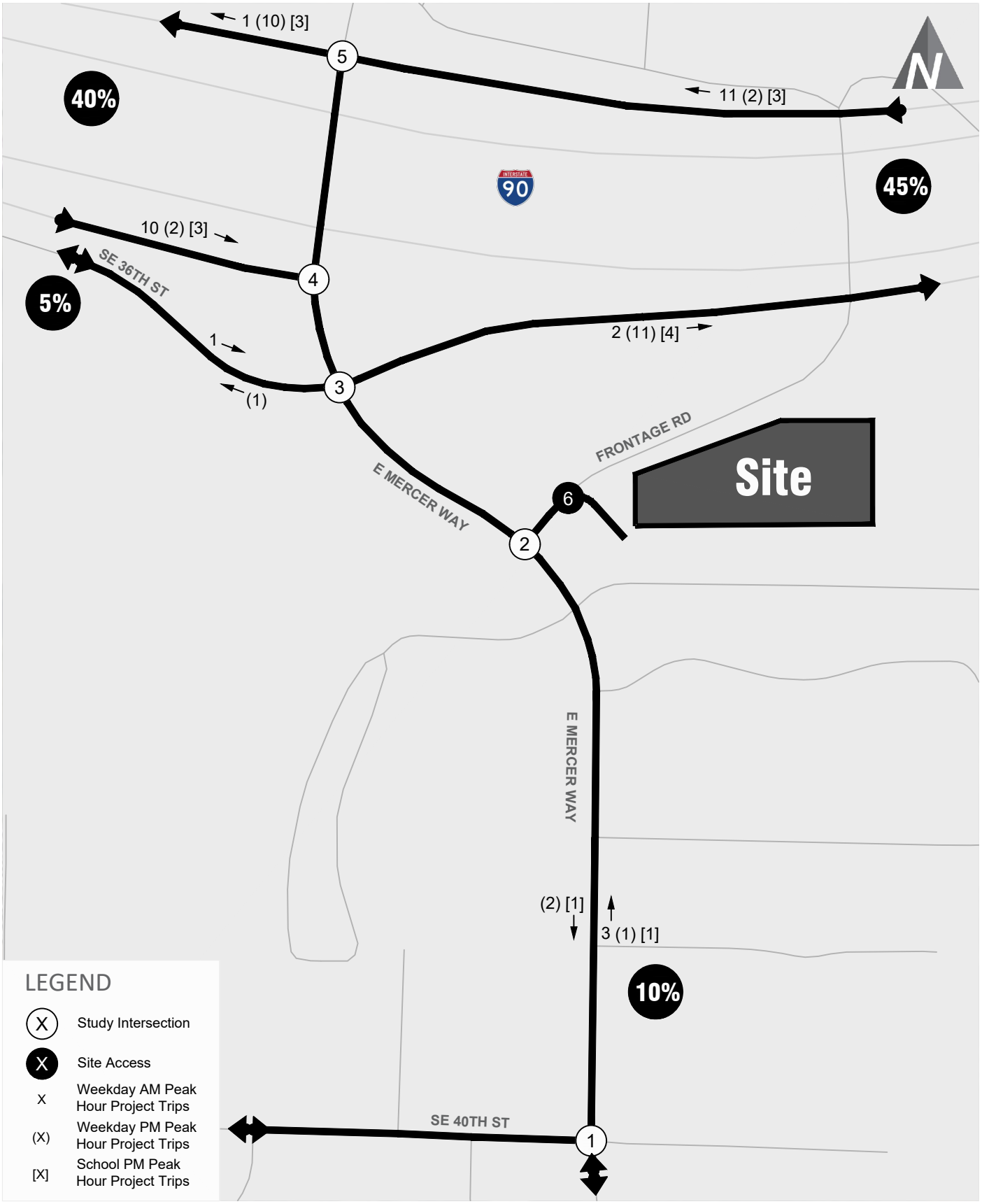

Office Trip Distribution and Assignment

Herzl Private School

FIGURE
8

transpogroup

Apr 18, 2024 - 9:54am jeffreyc M:\23\1.23278.00 - Herzl Private School\Graphics\DWG\Graphics_23278.dwg Layout: Office Dist & Assignment

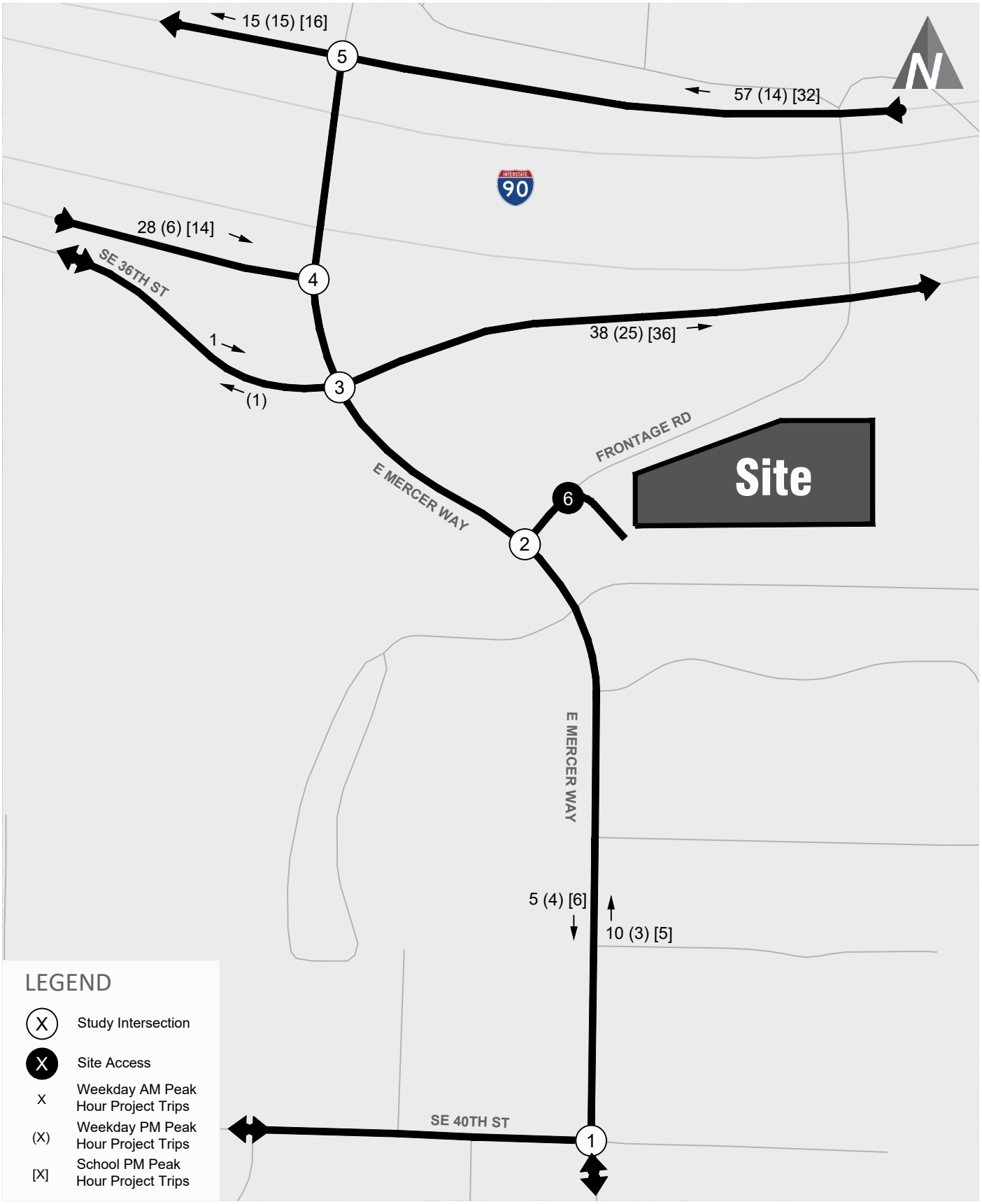

Total Trip Distribution and Assignment

Herzl Private School

FIGURE
9

transpogroup

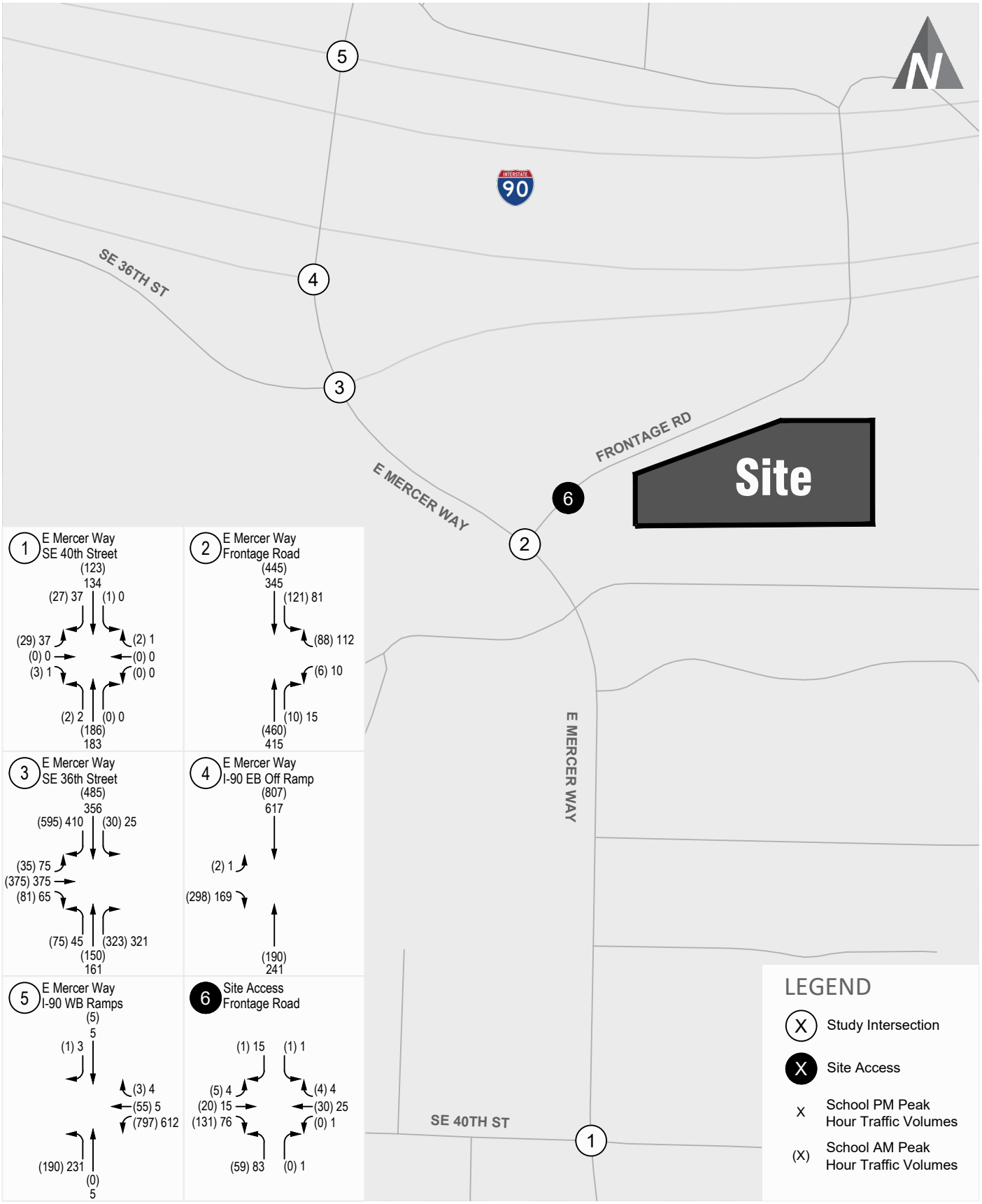

Future (2026) With-Project School Peak Hour Traffic Volumes

FIGURE 10

Herzl Private School

transpogroup

Apr 29, 2024 - 9:49am jeffreyc M:\23\1.23278.00 - Herzl Private School\Graphics\DWG\Graphics_23278.dwg Layout: WP School

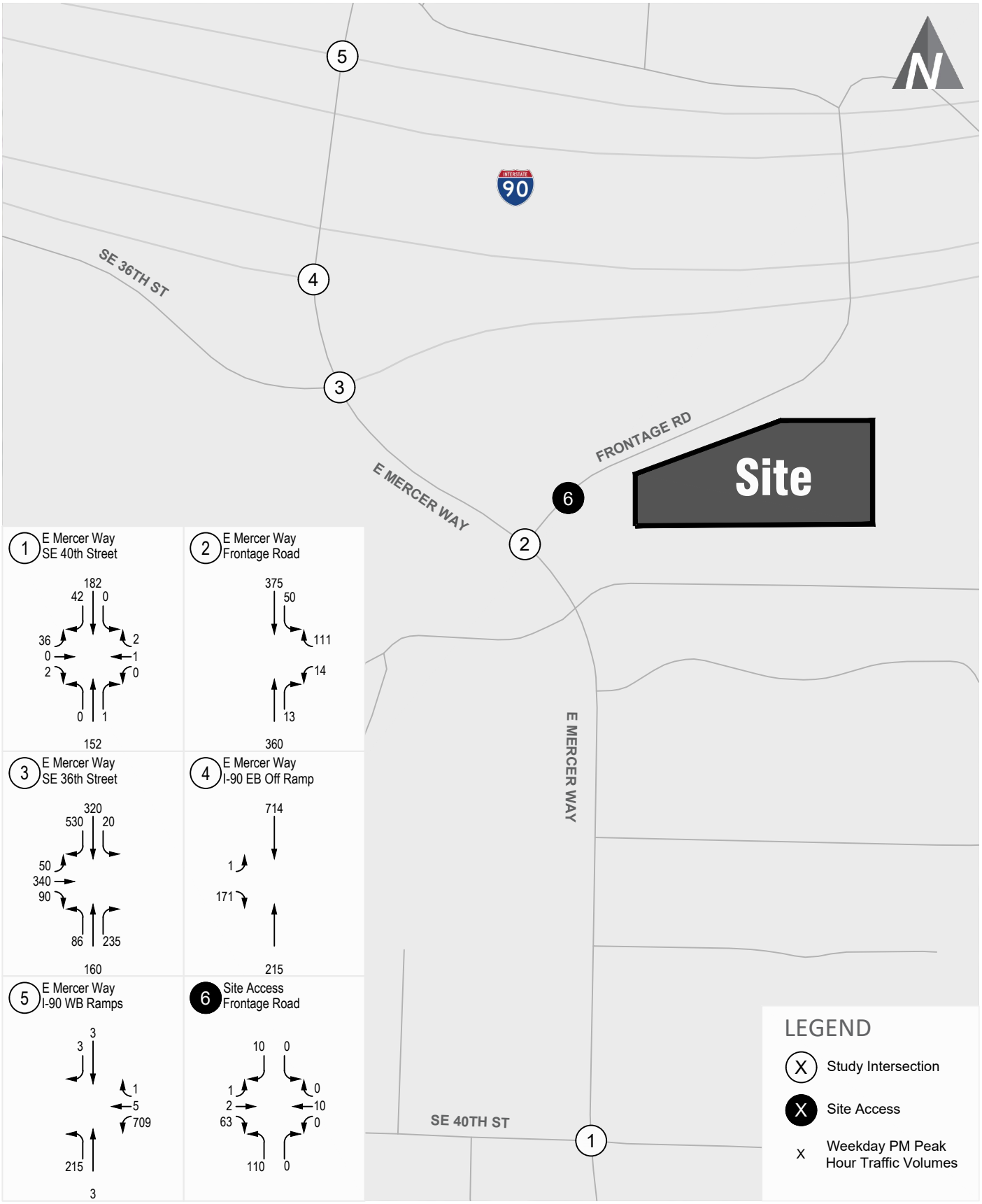

Future (2026) With-Project PM Peak Hour Traffic Volumes

FIGURE 11

Herzl Private School

transpogroup

Apr 29, 2024 - 9:49am jeffreyc M:\23\1.23278.00 - Herzl Private School\Graphics\DWG\Graphics_23278.dwg Layout: WP PM

Future With-Project Traffic Operations

Intersection operations analysis was conducted in the study area to evaluate the future 2026 conditions with the development of the project. Intersection LOS were calculated at the study intersections using the LOS methodology described previously.

Table 6 provides a comparison between the 2026 with and without project conditions. The detailed LOS worksheets are included in Appendix C.

Table 6. Future Without-Project and With-Project Peak Hour LOS Summary

	2026 Without-Project			2026 With-Project		
Intersection	**LOS[1]**	**Delay[2]**	**WM[3]**	**LOS**	**Delay**	**WM**
School AM Peak Hour						
1. E Mercer Way/SE 40th Street	B	11	EB	B	11	EB
2. E Mercer Way/Frontage Rd	B	12	WB	C	16	WB
3. E Mercer Way/SE 36th Street/I-90 EB On Ramp[4]	C	20	-	C	22	-
4. E Mercer Way/I-90 EB Off Ramp[4]	B	11	-	B	13	-
5. E Mercer Way/I-90 WB Ramps	B	16	-	C	20	-
6. Site Access/Frontage Road	-	-	-	A	10	NBL
School PM Peak Hour						
1. E Mercer Way/SE 40th Street	B	12	EB	B	12	EB
2. E Mercer Way/Frontage Rd	B	12	WB	B	14	WB
3. E Mercer Way/SE 36th Street/I-90 EB On Ramp[4]	C	21	-	C	22	-
4. E Mercer Way/I-90 EB Off Ramp[4]	A	8	-	A	8	-
5. E Mercer Way/I-90 WB Ramps	B	13	-	B	14	-
6. Site Access/Frontage Road	-	-	-	A	9	NBL
Weekday PM Peak Hour						
1. E Mercer Way/SE 40th Street	B	12	EB	B	12	EB
2. E Mercer Way/Frontage Rd	B	13	WB	B	14	WB
3. E Mercer Way/SE 36th Street/I-90 EB On Ramp[4]	B	19	-	B	20	-
4. E Mercer Way/I-90 EB Off Ramp[4]	A	8	-	A	8	-
5. E Mercer Way/I-90 WB Ramps	B	13	-	B	14	-
6. Site Access/Frontage Road	-	-	-	B	11	NBL

1. Level Of Service (A – F) as defined by the Highway Capacity Manual (TRB, 7th Edition)
2. Average delay per vehicle in seconds.
3. Worst movement (WM) reported for side-street stop controlled intersections. EB = eastbound approach; WB = westbound approach; and NBL = northbound left-turn movement.
4. Traffic operations ran in HCM 2000 due to clustered intersection

As shown in Table 6, all study intersections currently operate at LOS C or better during the peak periods, meeting the City of Mercer Island's LOS D standard with 4 seconds or less additional delay relative to without-project conditions. The site access along Frontage Road functions at LOS B or better under future with-project conditions, with 11 seconds of delay or less in all scenarios. Based on the acceptable LOS forecasts at the study intersections and the site accesses, there are no mitigations required for this project.

Parking Demand

ITE's Parking Generation Manual (6th Edition) was used to estimate the peak parking demand for the proposed uses. It is estimated that the peak parking demand for the school use will be 21 vehicles, while the peak parking demand for the office use is 23 vehicles. Hourly breakdown of the parking demand is shown in Table 7 below.

Table 7. Parking Demand by Hour

	Elementary School (LU 520)[1]		General Office (LU 710)		
Time	**% of weekday peak parking demand**	**Parking Demand**	**% of weekday peak parking demand**	**Parking Demand**	**Total Parking Demand**
8:00 AM	100%	21	47%	11	32
9:00 AM	96%	20	87%	20	40
10:00 AM	**95%**	**20**	**99%**	**23**	**43**
11:00 AM	**97%**	**20**	**100%**	**23**	**43**
12:00 PM	94%	20	86%	20	40
1:00 PM	96%	20	84%	19	39
2:00 PM	96%	20	93%	21	41
3:00 PM	75%	16	93%	21	37
4:00 PM	53%	11	85%	20	31
5:00 PM	28%	6	57%	13	19

1. K-8 Private School (LU 530) has no data in ITE Parking Generation Manual (6th Edition), data from LU 520 used as closest matching LU.

As shown in Table 7, the peak overall parking demand for the proposed site is estimated to be 43 vehicles between the hours of 10 AM and 11 AM. The proposed site plan for the JDS site currently provides 100 parking spaces, which is shared with the neighboring Herzl-Ner Tamid Conservative Congregation. This is a very compatible use as the synagogue would only require parking for between 10-12 staff during the weekday given religious services primarily occur on the weekends. School hours and days will not overlap or coincide with either religious service or Jewish holidays; therefore, the proposed parking supply of 100 spaces should meet the peak parking demand of 43 vehicles expected from the proposed JDS site.

Findings and Recommendations

This transportation impact study summarizes the project traffic impacts of the FASPS enrollment increase. General findings and recommendations include:

- **Proposed Project**: The proposed project would create a 12,300 square foot office space and a private school enrolling up to 150 students in the K-8 grade level
- **Trip Generation**: The proposed project would generate approximately 154 new school AM peak hour trips ,109 new school PM peak hour trips, and 68 new weekday PM peak hour trips.
- **Traffic Operations**: Under existing and future conditions, all study intersections are anticipated to operate at LOS D or better during the school AM and PM and weekday PM peak hours. The site access intersection with-project is forecast to operate at LOS B or better, with 10 seconds of delay or less during all 3 time periods.
- **Future Parking Demand**: The proposed site would generate a peak parking demand of 43 vehicles. The proposed parking supply of 100 parking spaces can accommodate future with-project parking demand estimates.

Appendix A:Traffic Counts

ALL TRAFFIC DATA SERVICES
(303) 216-2439
www.alltrafficdata.net

Location: 1 E MERCER WAY & SE 40TH ST AM
Date: Wednesday, March 27, 2024
Peak Hour: 08:00 AM - 09:00 AM
Peak 15-Minutes: 08:00 AM - 08:15 AM

Peak Hour

Motorized Vehicles

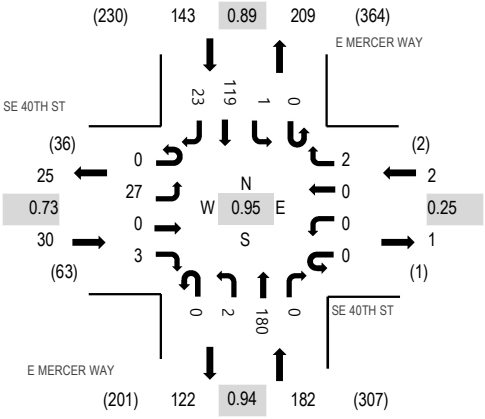

Note: Total study counts contained in parentheses.

	HV%	PHF
EB	0.0%	0.73
WB	0.0%	0.25
NB	0.0%	0.94
SB	0.0%	0.89
All	0.0%	0.95

Heavy Vehicles

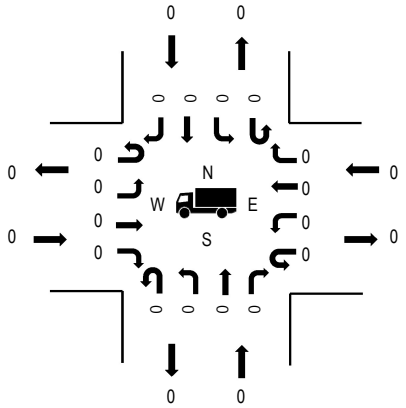

Pedestrians/Bicycles in Crosswalk

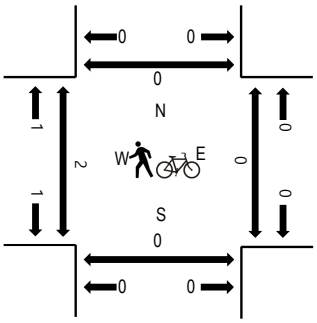

Traffic Counts - Motorized Vehicles

Interval Start Time	SE 40TH ST Eastbound				SE 40TH ST Westbound				E MERCER WAY Northbound				E MERCER WAY Southbound					Rolling Hour
	U-Turn	Left	Thru	Right	U-Turn	Left	Thru	Right	U-Turn	Left	Thru	Right	U-Turn	Left	Thru	Right	Total	
7:00 AM	0	5	0	0	0	0	0	0	0	0	22	0	0	0	13	0	40	245
7:15 AM	0	9	0	1	0	0	0	0	0	0	31	0	0	0	18	4	63	299
7:30 AM	0	14	0	0	0	0	0	0	0	0	28	0	0	0	20	2	64	329
7:45 AM	0	4	0	0	0	0	0	0	0	2	42	0	0	0	27	3	78	348
8:00 AM	0	13	0	0	0	0	0	2	0	0	45	0	0	0	28	6	94	357
8:15 AM	0	4	0	0	0	0	0	0	0	0	49	0	0	1	36	3	93	
8:30 AM	0	6	0	1	0	0	0	0	0	1	45	0	0	0	23	7	83	
8:45 AM	0	4	0	2	0	0	0	0	0	1	41	0	0	0	32	7	87	
Count Total	0	59	0	4	0	0	0	2	0	4	303	0	0	1	197	32	602	
Peak Hour	0	27	0	3	0	0	0	2	0	2	180	0	0	1	119	23	357	

Traffic Counts - Heavy Vehicles, Bicycles on Road, and Pedestrians/Bicycles in Crosswalk

Interval Start Time	Heavy Vehicles					Interval Start Time	Bicycles on Roadway					Interval Start Time	Pedestrians/Bicycles on Crosswalk				
	EB	NB	WB	SB	Total		EB	NB	WB	SB	Total		EB	NB	WB	SB	Total
7:00 AM	0	0	0	0	0	7:00 AM	0	0	0	0	0	7:00 AM	0	0	0	0	0
7:15 AM	0	0	0	0	0	7:15 AM	0	0	0	0	0	7:15 AM	0	0	0	0	0
7:30 AM	0	0	0	0	0	7:30 AM	0	1	0	1	2	7:30 AM	1	0	0	0	1
7:45 AM	0	0	0	0	0	7:45 AM	0	1	0	0	1	7:45 AM	3	0	2	0	5
8:00 AM	0	0	0	0	0	8:00 AM	0	1	0	0	1	8:00 AM	0	0	0	0	0
8:15 AM	0	0	0	0	0	8:15 AM	0	0	0	0	0	8:15 AM	2	0	0	0	2
8:30 AM	0	0	0	0	0	8:30 AM	0	1	0	1	2	8:30 AM	0	0	0	0	0
8:45 AM	0	0	0	0	0	8:45 AM	0	0	0	1	1	8:45 AM	0	0	0	0	0
Count Total	0	0	0	0	0	Count Total	0	4	0	3	7	Count Total	6	0	2	0	8
Peak Hour	0	0	0	0	0	Peak Hour	0	2	0	2	4	Peak Hour	2	0	0	0	2

ALL TRAFFIC DATA SERVICES
(303) 216-2439
www.alltrafficdata.net

Location: 2 E MERCER WAY & FRONTAGE RD AM
Date: Wednesday, March 27, 2024
Peak Hour: 08:00 AM - 09:00 AM
Peak 15-Minutes: 08:00 AM - 08:15 AM

Peak Hour

Motorized Vehicles

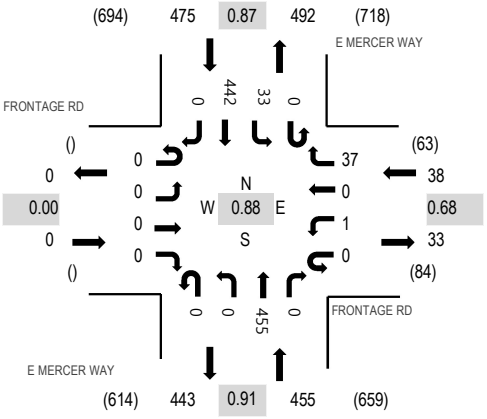

Note: Total study counts contained in parentheses.

	HV%	PHF
EB	0.0%	0.00
WB	10.5%	0.68
NB	0.0%	0.91
SB	0.6%	0.87
All	0.7%	0.88

Heavy Vehicles

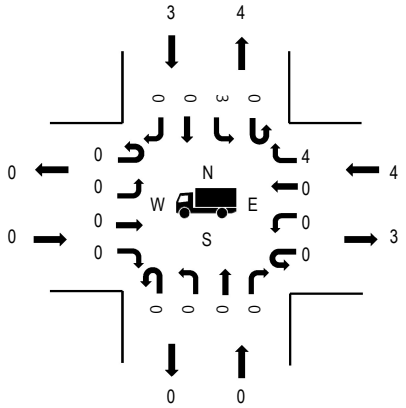

Pedestrians/Bicycles in Crosswalk

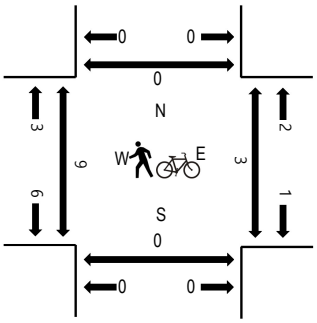

Traffic Counts - Motorized Vehicles

Interval Start Time	FRONTAGE RD Eastbound				FRONTAGE RD Westbound				E MERCER WAY Northbound				E MERCER WAY Southbound					Rolling Hour
	U-Turn	Left	Thru	Right	U-Turn	Left	Thru	Right	U-Turn	Left	Thru	Right	U-Turn	Left	Thru	Right	Total	
7:00 AM	0	0	0	0	0	0	0	6	0	0	36	1	0	6	24	0	73	448
7:15 AM	0	0	0	0	0	0	0	11	0	0	47	1	1	12	31	0	103	650
7:30 AM	0	0	0	0	0	0	0	6	0	0	57	1	0	12	40	0	116	791
7:45 AM	0	0	0	0	0	0	0	2	0	0	60	1	0	17	76	0	156	917
8:00 AM	0	0	0	0	0	1	0	12	0	0	125	0	0	14	123	0	275	968
8:15 AM	0	0	0	0	0	0	0	6	0	0	105	0	0	7	126	0	244	
8:30 AM	0	0	0	0	0	0	0	5	0	0	122	0	0	7	108	0	242	
8:45 AM	0	0	0	0	0	0	0	14	0	0	103	0	0	5	85	0	207	
Count Total	0	0	0	0	0	1	0	62	0	0	655	4	1	80	613	0	1,416	
Peak Hour	0	0	0	0	0	1	0	37	0	0	455	0	0	33	442	0	968	

Traffic Counts - Heavy Vehicles, Bicycles on Road, and Pedestrians/Bicycles in Crosswalk

Interval Start Time	Heavy Vehicles					Interval Start Time	Bicycles on Roadway					Interval Start Time	Pedestrians/Bicycles on Crosswalk				
	EB	NB	WB	SB	Total		EB	NB	WB	SB	Total		EB	NB	WB	SB	Total
7:00 AM	0	0	0	0	0	7:00 AM	0	0	0	0	0	7:00 AM	0	0	0	0	0
7:15 AM	0	0	0	1	1	7:15 AM	0	0	0	0	0	7:15 AM	1	0	3	0	4
7:30 AM	0	0	0	0	0	7:30 AM	0	2	0	1	3	7:30 AM	0	0	0	0	0
7:45 AM	0	0	0	0	0	7:45 AM	0	1	0	0	1	7:45 AM	0	0	1	0	1
8:00 AM	0	0	1	1	2	8:00 AM	0	1	0	0	1	8:00 AM	0	0	0	0	0
8:15 AM	0	0	1	2	3	8:15 AM	0	0	0	0	0	8:15 AM	4	0	0	0	4
8:30 AM	0	0	1	0	1	8:30 AM	0	1	0	2	3	8:30 AM	2	0	0	0	2
8:45 AM	0	0	1	0	1	8:45 AM	0	0	0	1	1	8:45 AM	3	0	3	0	6
Count Total	0	0	4	4	8	Count Total	0	5	0	4	9	Count Total	10	0	7	0	17
Peak Hour	0	0	4	3	7	Peak Hour	0	2	0	3	5	Peak Hour	9	0	3	0	12

ALL TRAFFIC DATA SERVICES
(303) 216-2439
www.alltrafficdata.net

Location: 3 E MERCER WAY & SE 36TH ST AM
Date: Wednesday, March 27, 2024
Peak Hour: 08:00 AM - 09:00 AM
Peak 15-Minutes: 08:00 AM - 08:15 AM

Peak Hour

Motorized Vehicles

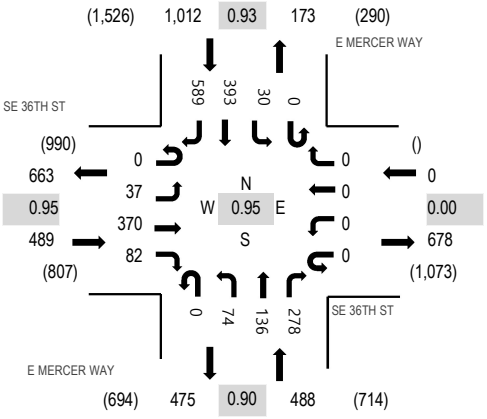

Note: Total study counts contained in parentheses.

	HV%	PHF
EB	0.0%	0.95
WB	0.0%	0.00
NB	0.8%	0.90
SB	0.3%	0.93
All	0.4%	0.95

Heavy Vehicles

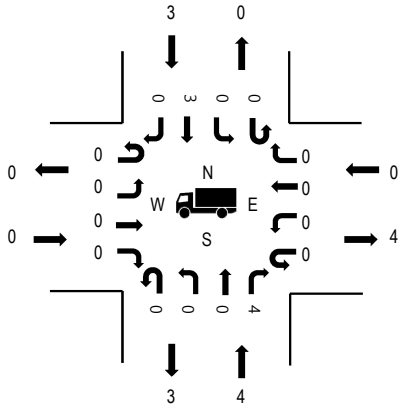

Pedestrians/Bicycles in Crosswalk

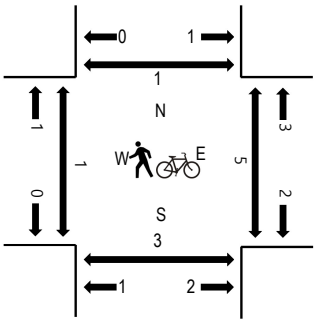

Traffic Counts - Motorized Vehicles

Interval Start Time	SE 36TH ST Eastbound				SE 36TH ST Westbound				E MERCER WAY Northbound				E MERCER WAY Southbound					Rolling Hour
	U-Turn	Left	Thru	Right	U-Turn	Left	Thru	Right	U-Turn	Left	Thru	Right	U-Turn	Left	Thru	Right	Total	
7:00 AM	0	2	50	2	0	0	0	0	0	3	18	21	0	3	28	58	185	1,058
7:15 AM	0	9	56	7	0	0	0	0	0	4	22	32	0	4	38	52	224	1,397
7:30 AM	0	8	82	6	0	0	0	0	0	7	26	31	0	2	45	82	289	1,684
7:45 AM	0	11	73	12	0	0	0	0	0	9	21	32	0	9	81	112	360	1,890
8:00 AM	0	13	98	18	0	0	0	0	0	15	37	83	0	4	119	137	524	1,989
8:15 AM	0	10	98	19	0	0	0	0	0	19	27	67	0	11	115	145	511	
8:30 AM	0	10	86	30	0	0	0	0	0	20	36	71	0	6	91	145	495	
8:45 AM	0	4	88	15	0	0	0	0	0	20	36	57	0	9	68	162	459	
Count Total	0	67	631	109	0	0	0	0	0	97	223	394	0	48	585	893	3,047	
Peak Hour	0	37	370	82	0	0	0	0	0	74	136	278	0	30	393	589	1,989	

Traffic Counts - Heavy Vehicles, Bicycles on Road, and Pedestrians/Bicycles in Crosswalk

Interval Start Time	Heavy Vehicles					Interval Start Time	Bicycles on Roadway					Interval Start Time	Pedestrians/Bicycles on Crosswalk				
	EB	NB	WB	SB	Total		EB	NB	WB	SB	Total		EB	NB	WB	SB	Total
7:00 AM	0	0	0	1	1	7:00 AM	5	0	0	0	5	7:00 AM	0	0	0	0	0
7:15 AM	0	0	0	1	1	7:15 AM	3	0	0	1	4	7:15 AM	0	0	1	0	1
7:30 AM	0	0	0	0	0	7:30 AM	1	2	0	2	5	7:30 AM	0	0	1	0	1
7:45 AM	0	0	0	0	0	7:45 AM	2	1	0	1	4	7:45 AM	0	0	1	0	1
8:00 AM	0	1	0	1	2	8:00 AM	1	1	0	1	3	8:00 AM	0	0	0	0	0
8:15 AM	0	1	0	2	3	8:15 AM	0	0	0	2	2	8:15 AM	0	2	2	0	4
8:30 AM	0	1	0	0	1	8:30 AM	2	1	0	3	6	8:30 AM	1	0	1	1	3
8:45 AM	0	1	0	0	1	8:45 AM	1	0	0	0	1	8:45 AM	0	1	2	0	3
Count Total	0	4	0	5	9	Count Total	15	5	0	10	30	Count Total	1	3	8	1	13
Peak Hour	0	4	0	3	7	Peak Hour	4	2	0	6	12	Peak Hour	1	3	5	1	10

ALL TRAFFIC DATA SERVICES
(303) 216-2439
www.alltrafficdata.net

Location: 4 E MERCER WAY & I-90 EB OFF RAMP AM
Date: Wednesday, March 27, 2024
Peak Hour: 08:00 AM - 09:00 AM
Peak 15-Minutes: 08:00 AM - 08:15 AM

Peak Hour

Motorized Vehicles

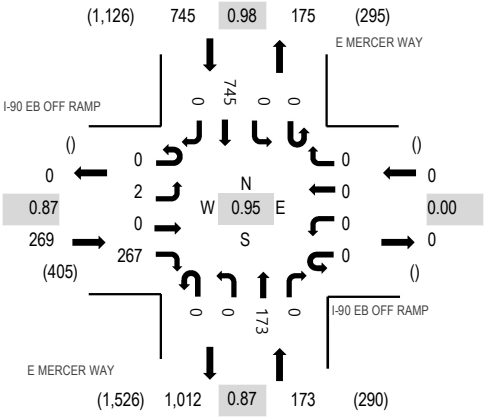

Note: Total study counts contained in parentheses.

	HV%	PHF
EB	0.0%	0.87
WB	0.0%	0.00
NB	0.0%	0.87
SB	0.4%	0.98
All	0.3%	0.95

Heavy Vehicles

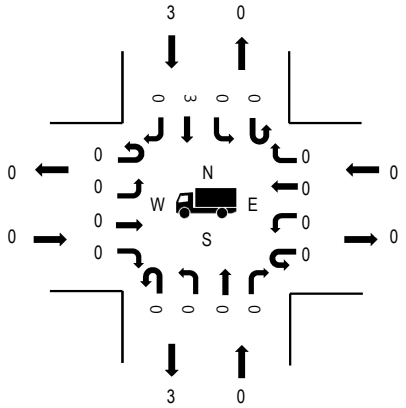

Pedestrians/Bicycles in Crosswalk

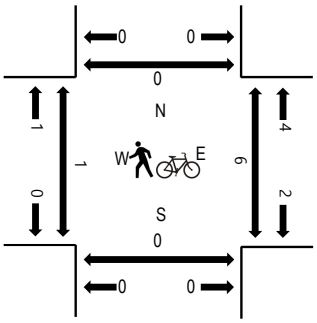

Traffic Counts - Motorized Vehicles

Interval Start Time	I-90 EB OFF RAMP Eastbound				I-90 EB OFF RAMP Westbound				E MERCER WAY Northbound				E MERCER WAY Southbound				Total	Rolling Hour
	U-Turn	Left	Thru	Right	U-Turn	Left	Thru	Right	U-Turn	Left	Thru	Right	U-Turn	Left	Thru	Right		
7:00 AM	0	1	0	20	0	0	0	0	0	0	19	0	0	0	69	0	109	634
7:15 AM	0	0	0	16	0	0	0	0	0	0	32	0	0	0	78	0	126	836
7:30 AM	0	1	0	36	0	0	0	0	0	0	34	0	0	0	93	0	164	1,018
7:45 AM	0	1	0	61	0	0	0	0	0	0	32	0	0	0	141	0	235	1,143
8:00 AM	0	1	0	80	0	0	0	0	0	0	50	0	0	0	180	0	311	1,187
8:15 AM	0	0	0	80	0	0	0	0	0	0	37	0	0	0	191	0	308	
8:30 AM	0	1	0	57	0	0	0	0	0	0	46	0	0	0	185	0	289	
8:45 AM	0	0	0	50	0	0	0	0	0	0	40	0	0	0	189	0	279	
Count Total	0	5	0	400	0	0	0	0	0	0	290	0	0	0	1,126	0	1,821	
Peak Hour	0	2	0	267	0	0	0	0	0	0	173	0	0	0	745	0	1,187	

Traffic Counts - Heavy Vehicles, Bicycles on Road, and Pedestrians/Bicycles in Crosswalk

Interval Start Time	Heavy Vehicles					Interval Start Time	Bicycles on Roadway					Interval Start Time	Pedestrians/Bicycles on Crosswalk				
	EB	NB	WB	SB	Total		EB	NB	WB	SB	Total		EB	NB	WB	SB	Total
7:00 AM	0	0	0	1	1	7:00 AM	0	5	0	0	5	7:00 AM	0	0	0	0	0
7:15 AM	0	0	0	1	1	7:15 AM	0	3	0	1	4	7:15 AM	0	0	3	0	3
7:30 AM	0	0	0	0	0	7:30 AM	0	2	0	2	4	7:30 AM	0	0	0	0	0
7:45 AM	0	0	0	0	0	7:45 AM	0	2	0	1	3	7:45 AM	0	0	1	0	1
8:00 AM	0	0	0	1	1	8:00 AM	0	2	0	3	5	8:00 AM	1	0	0	0	1
8:15 AM	0	0	0	2	2	8:15 AM	0	0	0	0	0	8:15 AM	0	0	2	0	2
8:30 AM	0	0	0	0	0	8:30 AM	0	1	0	3	4	8:30 AM	0	0	1	0	1
8:45 AM	0	0	0	0	0	8:45 AM	0	0	0	0	0	8:45 AM	0	0	3	0	3
Count Total	0	0	0	5	5	Count Total	0	15	0	10	25	Count Total	1	0	10	0	11
Peak Hour	0	0	0	3	3	Peak Hour	0	3	0	6	9	Peak Hour	1	0	6	0	7

ALL TRAFFIC DATA SERVICES
(303) 216-2439
www.alltrafficdata.net

Location: 5 E MERCER WAY & I-90 WB RAMPS AM
Date: Wednesday, March 27, 2024
Peak Hour: 08:00 AM - 09:00 AM
Peak 15-Minutes: 08:15 AM - 08:30 AM

Peak Hour

Motorized Vehicles

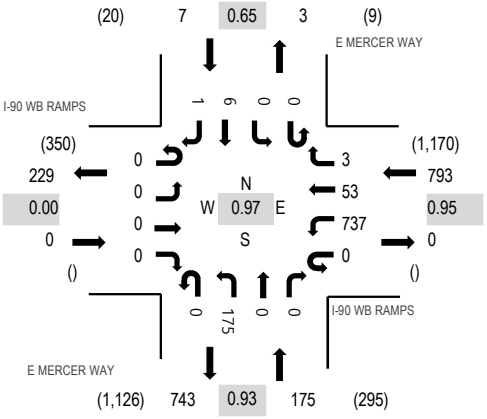

Note: Total study counts contained in parentheses.

	HV%	PHF
EB	0.0%	0.00
WB	0.4%	0.95
NB	0.0%	0.93
SB	0.0%	0.65
All	0.3%	0.97

Heavy Vehicles

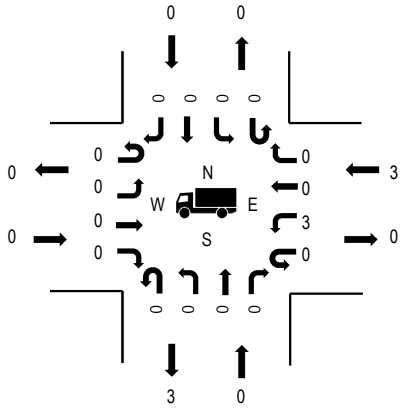

Pedestrians/Bicycles in Crosswalk

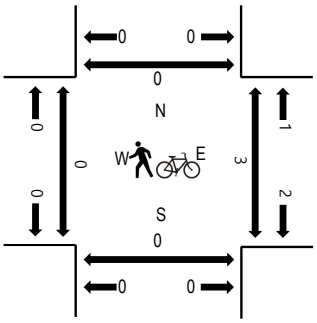

Traffic Counts - Motorized Vehicles

Interval Start Time	I-90 WB RAMPS Eastbound				I-90 WB RAMPS Westbound				E MERCER WAY Northbound				E MERCER WAY Southbound				Total	Rolling Hour
	U-Turn	Left	Thru	Right	U-Turn	Left	Thru	Right	U-Turn	Left	Thru	Right	U-Turn	Left	Thru	Right		
7:00 AM	0	0	0	0	0	68	0	1	0	19	1	0	0	0	1	1	91	510
7:15 AM	0	0	0	0	0	76	1	2	0	31	0	0	0	0	2	0	112	646
7:30 AM	0	0	0	0	0	96	0	1	0	35	1	0	0	0	3	1	137	786
7:45 AM	0	0	0	0	0	132	0	0	1	32	0	0	0	0	4	1	170	899
8:00 AM	0	0	0	0	0	177	1	1	0	47	0	0	0	0	1	0	227	975
8:15 AM	0	0	0	0	0	195	13	0	0	41	0	0	0	0	2	1	252	
8:30 AM	0	0	0	0	0	185	19	1	0	43	0	0	0	0	2	0	250	
8:45 AM	0	0	0	0	0	180	20	1	0	44	0	0	0	0	1	0	246	
Count Total	0	0	0	0	0	1,109	54	7	1	292	2	0	0	0	16	4	1,485	
Peak Hour	0	0	0	0	0	737	53	3	0	175	0	0	0	0	6	1	975	

Traffic Counts - Heavy Vehicles, Bicycles on Road, and Pedestrians/Bicycles in Crosswalk

Interval Start Time	Heavy Vehicles					Interval Start Time	Bicycles on Roadway					Interval Start Time	Pedestrians/Bicycles on Crosswalk				
	EB	NB	WB	SB	Total		EB	NB	WB	SB	Total		EB	NB	WB	SB	Total
7:00 AM	0	0	1	0	1	7:00 AM	0	5	0	0	5	7:00 AM	0	0	0	0	0
7:15 AM	0	0	1	0	1	7:15 AM	0	3	0	1	4	7:15 AM	0	0	2	0	2
7:30 AM	0	0	0	0	0	7:30 AM	0	2	0	2	4	7:30 AM	0	0	1	0	1
7:45 AM	0	0	0	0	0	7:45 AM	0	1	0	1	2	7:45 AM	0	0	1	0	1
8:00 AM	0	0	1	0	1	8:00 AM	0	1	0	3	4	8:00 AM	0	0	0	0	0
8:15 AM	0	0	2	0	2	8:15 AM	0	1	0	0	1	8:15 AM	0	0	1	0	1
8:30 AM	0	0	0	0	0	8:30 AM	0	2	0	3	5	8:30 AM	0	0	0	0	0
8:45 AM	0	0	0	0	0	8:45 AM	0	0	0	0	0	8:45 AM	0	0	2	0	2
Count Total	0	0	5	0	5	Count Total	0	15	0	10	25	Count Total	0	0	7	0	7
Peak Hour	0	0	3	0	3	Peak Hour	0	4	0	6	10	Peak Hour	0	0	3	0	3

ALL TRAFFIC DATA SERVICES
(303) 216-2439
www.alltrafficdata.net

Location: 6 SITE ACCESS & FRONTAGE RD AM
Date: Wednesday, March 27, 2024
Peak Hour: 07:15 AM - 08:15 AM
Peak 15-Minutes: 08:00 AM - 08:15 AM

Peak Hour

Motorized Vehicles

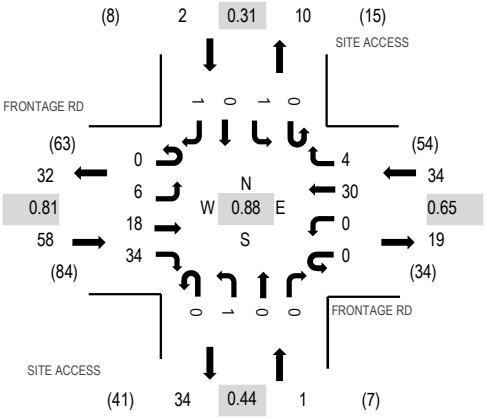

Note: Total study counts contained in parentheses.

	HV%	PHF
EB	3.4%	0.81
WB	2.9%	0.65
NB	0.0%	0.44
SB	0.0%	0.31
All	3.2%	0.88

Heavy Vehicles

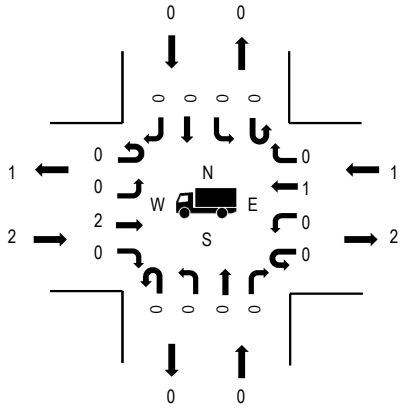

Pedestrians/Bicycles in Crosswalk

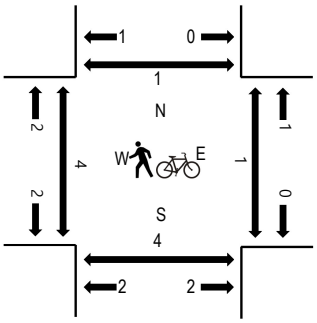

Traffic Counts - Motorized Vehicles

Interval Start Time	FRONTAGE RD Eastbound				FRONTAGE RD Westbound				SITE ACCESS Northbound				SITE ACCESS Southbound				Total	Rolling Hour
	U-Turn	Left	Thru	Right	U-Turn	Left	Thru	Right	U-Turn	Left	Thru	Right	U-Turn	Left	Thru	Right		
7:00 AM	0	1	3	3	0	0	4	0	0	0	0	0	0	0	0	2	13	81
7:15 AM	0	0	5	7	0	0	11	2	0	0	0	0	0	0	0	0	25	95
7:30 AM	0	2	5	7	0	0	6	0	0	0	0	0	0	0	0	0	20	84
7:45 AM	0	3	3	12	0	0	2	2	0	0	0	0	0	0	0	1	23	76
8:00 AM	0	1	5	8	0	0	11	0	0	1	0	0	0	1	0	0	27	72
8:15 AM	0	1	5	1	0	0	4	1	0	2	0	0	0	0	0	0	14	
8:30 AM	0	1	5	1	0	0	1	0	0	4	0	0	0	0	0	0	12	
8:45 AM	0	1	2	2	0	0	10	0	0	0	0	0	0	0	0	4	19	
Count Total	0	10	33	41	0	0	49	5	0	7	0	0	0	1	0	7	153	
Peak Hour	0	6	18	34	0	0	30	4	0	1	0	0	0	1	0	1	95	

Traffic Counts - Heavy Vehicles, Bicycles on Road, and Pedestrians/Bicycles in Crosswalk

Interval Start Time	Heavy Vehicles					Interval Start Time	Bicycles on Roadway					Interval Start Time	Pedestrians/Bicycles on Crosswalk				
	EB	NB	WB	SB	Total		EB	NB	WB	SB	Total		EB	NB	WB	SB	Total
7:00 AM	0	0	0	0	0	7:00 AM	0	0	0	0	0	7:00 AM	0	0	0	0	0
7:15 AM	1	0	0	0	1	7:15 AM	0	0	0	0	0	7:15 AM	3	2	0	0	5
7:30 AM	0	0	0	0	0	7:30 AM	0	0	0	0	0	7:30 AM	0	1	0	0	1
7:45 AM	0	0	1	0	1	7:45 AM	0	0	0	0	0	7:45 AM	1	1	1	1	4
8:00 AM	1	0	0	0	1	8:00 AM	0	0	0	0	0	8:00 AM	0	0	0	0	0
8:15 AM	2	0	1	0	3	8:15 AM	0	0	0	0	0	8:15 AM	0	0	0	0	0
8:30 AM	0	0	1	0	1	8:30 AM	0	0	0	0	0	8:30 AM	0	0	0	0	0
8:45 AM	0	0	1	0	1	8:45 AM	0	0	0	0	0	8:45 AM	3	1	1	0	5
Count Total	4	0	4	0	8	Count Total	0	0	0	0	0	Count Total	7	5	2	1	15
Peak Hour	2	0	1	0	3	Peak Hour	0	0	0	0	0	Peak Hour	4	4	1	1	10

ALL TRAFFIC DATA SERVICES
(303) 216-2439
www.alltrafficdata.net

Location: 1 E MERCER WAY & SE 40TH ST PM
Date: Wednesday, March 27, 2024
Peak Hour: 03:00 PM - 04:00 PM
Peak 15-Minutes: 03:15 PM - 03:30 PM

Peak Hour

Motorized Vehicles

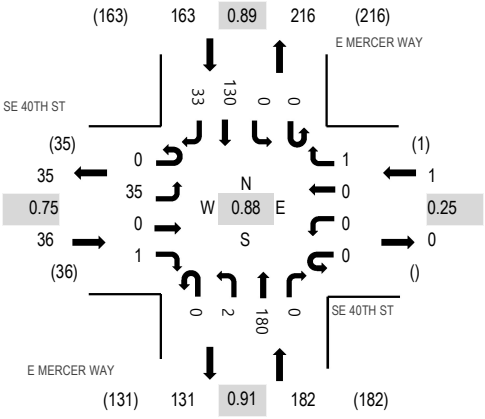

Note: Total study counts contained in parentheses.

Heavy Vehicles

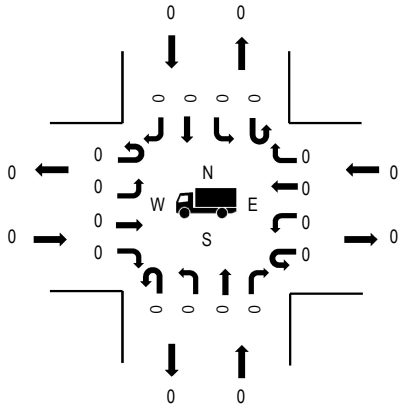

Pedestrians/Bicycles in Crosswalk

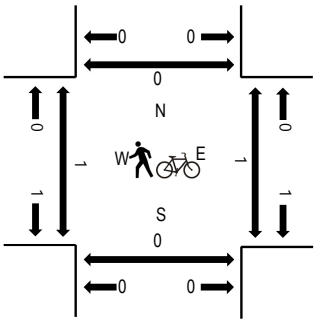

	HV%	PHF
EB	0.0%	0.75
WB	0.0%	0.25
NB	0.0%	0.91
SB	0.0%	0.89
All	0.0%	0.88

Traffic Counts - Motorized Vehicles

Interval Start Time	SE 40TH ST Eastbound				SE 40TH ST Westbound				E MERCER WAY Northbound				E MERCER WAY Southbound				Total	Rolling Hour
	U-Turn	Left	Thru	Right	U-Turn	Left	Thru	Right	U-Turn	Left	Thru	Right	U-Turn	Left	Thru	Right		
3:00 PM	0	9	0	0	0	0	0	0	0	0	46	0	0	0	31	9	95	382
3:15 PM	0	11	0	1	0	0	0	0	0	0	50	0	0	0	38	8	108	
3:30 PM	0	5	0	0	0	0	0	1	0	0	47	0	0	0	27	5	85	
3:45 PM	0	10	0	0	0	0	0	0	0	2	37	0	0	0	34	11	94	
Count Total	0	35	0	1	0	0	0	1	0	2	180	0	0	0	130	33	382	
Peak Hour	0	35	0	1	0	0	0	1	0	2	180	0	0	0	130	33	382	

Traffic Counts - Heavy Vehicles, Bicycles on Road, and Pedestrians/Bicycles in Crosswalk

Interval Start Time	Heavy Vehicles					Interval Start Time	Bicycles on Roadway					Interval Start Time	Pedestrians/Bicycles on Crosswalk				
	EB	NB	WB	SB	Total		EB	NB	WB	SB	Total		EB	NB	WB	SB	Total
3:00 PM	0	0	0	0	0	3:00 PM	0	1	0	2	3	3:00 PM	1	0	0	0	1
3:15 PM	0	0	0	0	0	3:15 PM	0	1	0	0	1	3:15 PM	0	0	0	0	0
3:30 PM	0	0	0	0	0	3:30 PM	0	0	0	0	0	3:30 PM	0	0	0	0	0
3:45 PM	0	0	0	0	0	3:45 PM	0	1	0	0	1	3:45 PM	0	0	1	0	1
Count Total	0	0	0	0	0	Count Total	0	3	0	2	5	Count Total	1	0	1	0	2
Peak Hour	0	0	0	0	0	Peak Hour	0	3	0	2	5	Peak Hour	1	0	1	0	2

ALL TRAFFIC DATA SERVICES
(303) 216-2439
www.alltrafficdata.net

Location: 2 E MERCER WAY & FRONTAGE RD PM
Date: Wednesday, March 27, 2024
Peak Hour: 03:00 PM - 04:00 PM
Peak 15-Minutes: 03:15 PM - 03:30 PM

Peak Hour

Motorized Vehicles

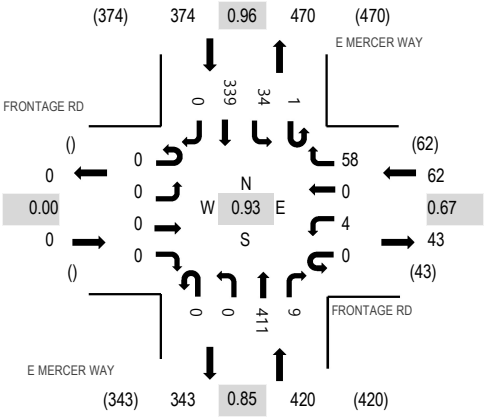

Note: Total study counts contained in parentheses.

	HV%	PHF
EB	0.0%	0.00
WB	3.2%	0.67
NB	0.0%	0.85
SB	0.3%	0.96
All	0.4%	0.93

Heavy Vehicles

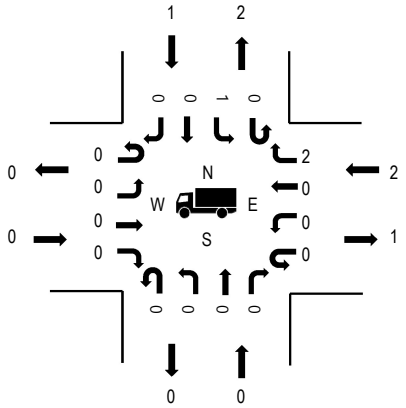

Pedestrians/Bicycles in Crosswalk

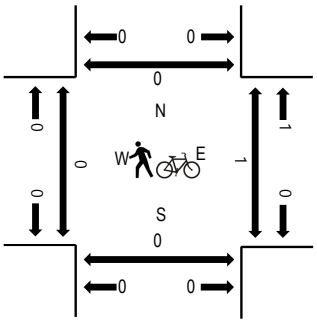

Traffic Counts - Motorized Vehicles

Interval Start Time	FRONTAGE RD Eastbound				FRONTAGE RD Westbound				E MERCER WAY Northbound				E MERCER WAY Southbound					Rolling Hour
	U-Turn	Left	Thru	Right	U-Turn	Left	Thru	Right	U-Turn	Left	Thru	Right	U-Turn	Left	Thru	Right	Total	
3:00 PM	0	0	0	0	0	0	0	12	0	0	85	2	1	11	78	0	189	856
3:15 PM	0	0	0	0	0	1	0	10	0	0	122	2	0	4	90	0	229	
3:30 PM	0	0	0	0	0	1	0	22	0	0	102	1	0	7	90	0	223	
3:45 PM	0	0	0	0	0	2	0	14	0	0	102	4	0	12	81	0	215	
Count Total	0	0	0	0	0	4	0	58	0	0	411	9	1	34	339	0	856	
Peak Hour	0	0	0	0	0	4	0	58	0	0	411	9	1	34	339	0	856	

Traffic Counts - Heavy Vehicles, Bicycles on Road, and Pedestrians/Bicycles in Crosswalk

Interval Start Time	Heavy Vehicles					Interval Start Time	Bicycles on Roadway					Interval Start Time	Pedestrians/Bicycles on Crosswalk				
	EB	NB	WB	SB	Total		EB	NB	WB	SB	Total		EB	NB	WB	SB	Total
3:00 PM	0	0	1	1	2	3:00 PM	0	1	0	1	2	3:00 PM	0	0	0	0	0
3:15 PM	0	0	1	0	1	3:15 PM	0	1	0	1	2	3:15 PM	0	0	1	0	1
3:30 PM	0	0	0	0	0	3:30 PM	0	0	0	0	0	3:30 PM	0	0	0	0	0
3:45 PM	0	0	0	0	0	3:45 PM	0	1	0	0	1	3:45 PM	0	0	0	0	0
Count Total	0	0	2	1	3	Count Total	0	3	0	2	5	Count Total	0	0	1	0	1
Peak Hour	0	0	2	1	3	Peak Hour	0	3	0	2	5	Peak Hour	0	0	1	0	1

ALL TRAFFIC DATA SERVICES
(303) 216-2439
www.alltrafficdata.net

Location: 3 E MERCER WAY & SE 36TH ST PM
Date: Wednesday, March 27, 2024
Peak Hour: 03:00 PM - 04:00 PM
Peak 15-Minutes: 03:30 PM - 03:45 PM

Peak Hour

Motorized Vehicles

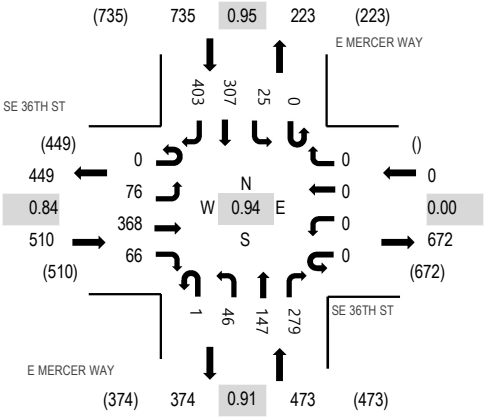

Note: Total study counts contained in parentheses.

	HV%	PHF
EB	0.0%	0.84
WB	0.0%	0.00
NB	0.4%	0.91
SB	0.3%	0.95
All	0.2%	0.94

Heavy Vehicles

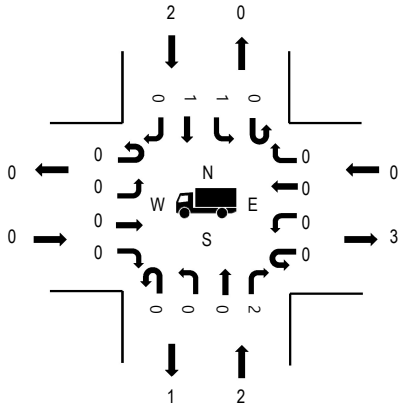

Pedestrians/Bicycles in Crosswalk

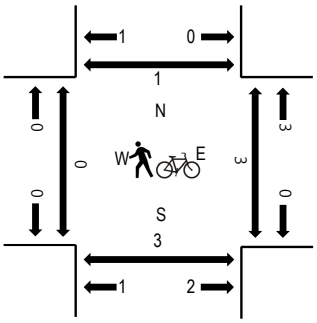

Traffic Counts - Motorized Vehicles

Interval Start Time	SE 36TH ST Eastbound				SE 36TH ST Westbound				E MERCER WAY Northbound				E MERCER WAY Southbound				Total	Rolling Hour
	U-Turn	Left	Thru	Right	U-Turn	Left	Thru	Right	U-Turn	Left	Thru	Right	U-Turn	Left	Thru	Right		
3:00 PM	0	20	108	23	0	0	0	0	0	11	31	59	0	7	68	89	416	1,718
3:15 PM	0	20	98	13	0	0	0	0	0	14	45	71	0	4	84	105	454	
3:30 PM	0	31	96	13	0	0	0	0	0	12	37	77	0	8	80	103	457	
3:45 PM	0	5	66	17	0	0	0	0	1	9	34	72	0	6	75	106	391	
Count Total	0	76	368	66	0	0	0	0	1	46	147	279	0	25	307	403	1,718	
Peak Hour	0	76	368	66	0	0	0	0	1	46	147	279	0	25	307	403	1,718	

Traffic Counts - Heavy Vehicles, Bicycles on Road, and Pedestrians/Bicycles in Crosswalk

Interval Start Time	Heavy Vehicles					Interval Start Time	Bicycles on Roadway					Interval Start Time	Pedestrians/Bicycles on Crosswalk				
	EB	NB	WB	SB	Total		EB	NB	WB	SB	Total		EB	NB	WB	SB	Total
3:00 PM	0	1	0	1	2	3:00 PM	0	1	0	1	2	3:00 PM	0	2	1	0	3
3:15 PM	0	1	0	0	1	3:15 PM	1	1	0	2	4	3:15 PM	0	0	1	1	2
3:30 PM	0	0	0	0	0	3:30 PM	0	0	0	1	1	3:30 PM	0	0	0	0	0
3:45 PM	0	0	0	1	1	3:45 PM	0	1	0	0	1	3:45 PM	0	1	1	0	2
Count Total	0	2	0	2	4	Count Total	1	3	0	4	8	Count Total	0	3	3	1	7
Peak Hour	0	2	0	2	4	Peak Hour	1	3	0	4	8	Peak Hour	0	3	3	1	7

ALL TRAFFIC DATA SERVICES
(303) 216-2439
www.alltrafficdata.net

Location: 4 E MERCER WAY & I-90 EB OFF RAMP PM
Date: Wednesday, March 27, 2024
Peak Hour: 03:00 PM - 04:00 PM
Peak 15-Minutes: 03:15 PM - 03:30 PM

Peak Hour

Motorized Vehicles

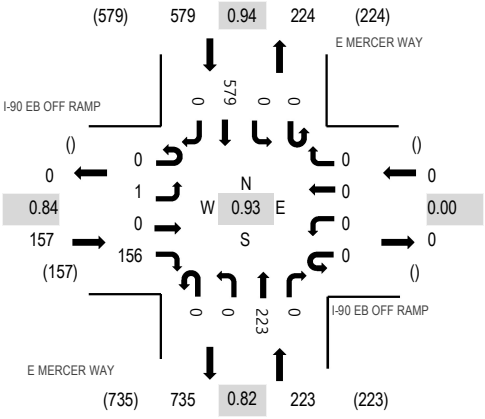

Note: Total study counts contained in parentheses.

	HV%	PHF
EB	0.0%	0.84
WB	0.0%	0.00
NB	0.0%	0.82
SB	0.3%	0.94
All	0.2%	0.93

Heavy Vehicles

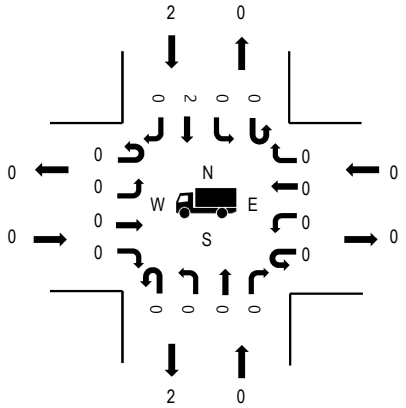

Pedestrians/Bicycles in Crosswalk

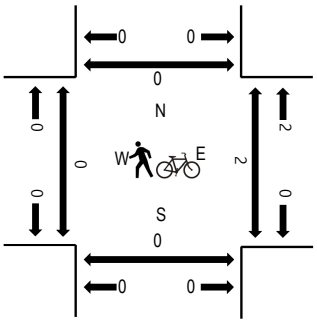

Traffic Counts - Motorized Vehicles

Interval Start Time	I-90 EB OFF RAMP Eastbound				I-90 EB OFF RAMP Westbound				E MERCER WAY Northbound				E MERCER WAY Southbound				Total	Rolling Hour
	U-Turn	Left	Thru	Right	U-Turn	Left	Thru	Right	U-Turn	Left	Thru	Right	U-Turn	Left	Thru	Right		
3:00 PM	0	0	0	36	0	0	0	0	0	0	51	0	0	0	128	0	215	959
3:15 PM	0	1	0	40	0	0	0	0	0	0	65	0	0	0	153	0	259	
3:30 PM	0	0	0	47	0	0	0	0	0	0	68	0	0	0	144	0	259	
3:45 PM	0	0	0	33	0	0	0	0	0	0	39	0	0	0	154	0	226	
Count Total	0	1	0	156	0	0	0	0	0	0	223	0	0	0	579	0	959	
Peak Hour	0	1	0	156	0	0	0	0	0	0	223	0	0	0	579	0	959	

Traffic Counts - Heavy Vehicles, Bicycles on Road, and Pedestrians/Bicycles in Crosswalk

Interval Start Time	Heavy Vehicles					Interval Start Time	Bicycles on Roadway					Interval Start Time	Pedestrians/Bicycles on Crosswalk				
	EB	NB	WB	SB	Total		EB	NB	WB	SB	Total		EB	NB	WB	SB	Total
3:00 PM	0	0	0	1	1	3:00 PM	0	0	0	1	1	3:00 PM	0	0	1	0	1
3:15 PM	0	0	0	0	0	3:15 PM	0	0	0	2	2	3:15 PM	0	0	0	0	0
3:30 PM	0	0	0	0	0	3:30 PM	0	0	0	1	1	3:30 PM	0	0	0	0	0
3:45 PM	0	0	0	1	1	3:45 PM	0	0	0	0	0	3:45 PM	0	0	1	0	1
Count Total	0	0	0	2	2	Count Total	0	0	0	4	4	Count Total	0	0	2	0	2
Peak Hour	0	0	0	2	2	Peak Hour	0	0	0	4	4	Peak Hour	0	0	2	0	2

ALL TRAFFIC DATA SERVICES
(303) 216-2439
www.alltrafficdata.net

Location: 5 E MERCER WAY & I-90 WB RAMPS PM
Date: Wednesday, March 27, 2024
Peak Hour: 03:00 PM - 04:00 PM
Peak 15-Minutes: 03:15 PM - 03:30 PM

Peak Hour

Motorized Vehicles

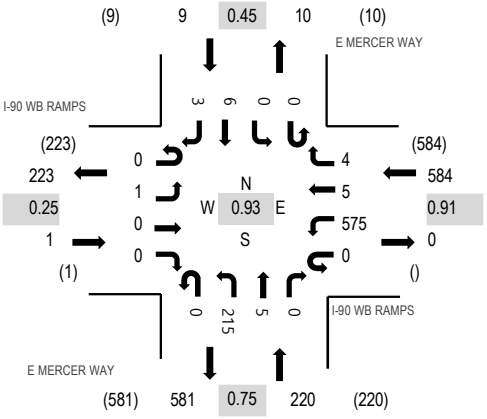

Note: Total study counts contained in parentheses.

	HV%	PHF
EB	0.0%	0.25
WB	0.3%	0.91
NB	0.0%	0.75
SB	0.0%	0.45
All	0.2%	0.93

Heavy Vehicles

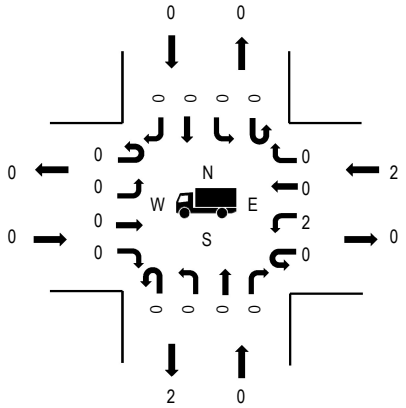

Pedestrians/Bicycles in Crosswalk

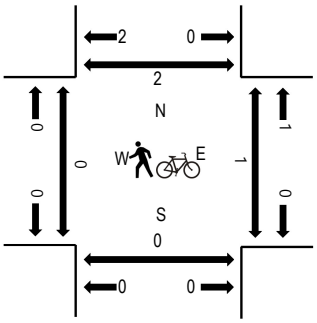

Traffic Counts - Motorized Vehicles

Interval Start Time	I-90 WB RAMPS Eastbound				I-90 WB RAMPS Westbound				E MERCER WAY Northbound				E MERCER WAY Southbound				Total	Rolling Hour
	U-Turn	Left	Thru	Right	U-Turn	Left	Thru	Right	U-Turn	Left	Thru	Right	U-Turn	Left	Thru	Right		
3:00 PM	0	0	0	0	0	124	1	1	0	47	2	0	0	0	3	2	180	814
3:15 PM	0	0	0	0	0	153	2	1	0	62	1	0	0	0	1	0	220	
3:30 PM	0	1	0	0	0	141	1	0	0	71	2	0	0	0	2	1	219	
3:45 PM	0	0	0	0	0	157	1	2	0	35	0	0	0	0	0	0	195	
Count Total	0	1	0	0	0	575	5	4	0	215	5	0	0	0	6	3	814	
Peak Hour	0	1	0	0	0	575	5	4	0	215	5	0	0	0	6	3	814	

Traffic Counts - Heavy Vehicles, Bicycles on Road, and Pedestrians/Bicycles in Crosswalk

Interval Start Time	Heavy Vehicles					Interval Start Time	Bicycles on Roadway					Interval Start Time	Pedestrians/Bicycles on Crosswalk				
	EB	NB	WB	SB	Total		EB	NB	WB	SB	Total		EB	NB	WB	SB	Total
3:00 PM	0	0	1	0	1	3:00 PM	0	0	0	1	1	3:00 PM	0	0	1	0	1
3:15 PM	0	0	0	0	0	3:15 PM	0	0	0	2	2	3:15 PM	0	0	0	2	2
3:30 PM	0	0	0	0	0	3:30 PM	0	0	0	1	1	3:30 PM	0	0	0	0	0
3:45 PM	0	0	1	0	1	3:45 PM	0	0	0	0	0	3:45 PM	0	0	0	0	0
Count Total	0	0	2	0	2	Count Total	0	0	0	4	4	Count Total	0	0	1	2	3
Peak Hour	0	0	2	0	2	Peak Hour	0	0	0	4	4	Peak Hour	0	0	1	2	3

ALL TRAFFIC DATA SERVICES
(303) 216-2439
www.alltrafficdata.net

Location: 6 SITE ACCESS & FRONTAGE RD PM
Date: Wednesday, March 27, 2024
Peak Hour: 03:00 PM - 04:00 PM
Peak 15-Minutes: 03:30 PM - 03:45 PM

Peak Hour

Motorized Vehicles

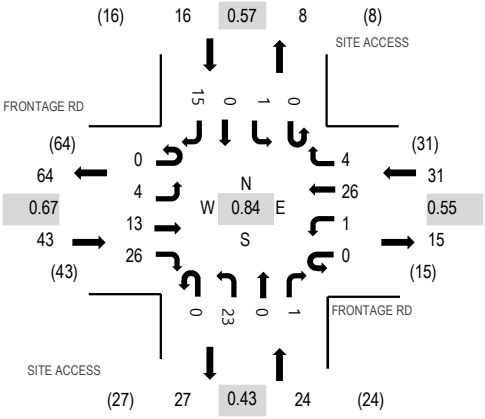

Note: Total study counts contained in parentheses.

	HV%	PHF
EB	2.3%	0.67
WB	6.5%	0.55
NB	0.0%	0.43
SB	0.0%	0.57
All	2.6%	0.84

Heavy Vehicles

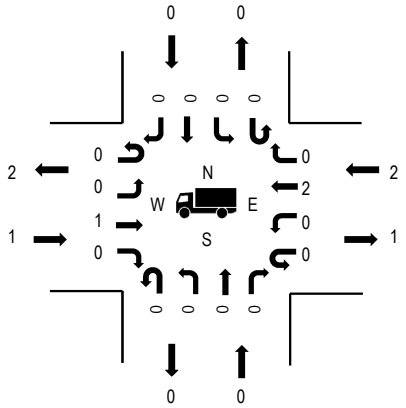

Pedestrians/Bicycles in Crosswalk

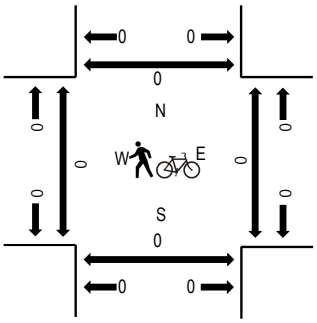

Traffic Counts - Motorized Vehicles

Interval Start Time	FRONTAGE RD Eastbound				FRONTAGE RD Westbound				SITE ACCESS Northbound				SITE ACCESS Southbound				Total	Rolling Hour
	U-Turn	Left	Thru	Right	U-Turn	Left	Thru	Right	U-Turn	Left	Thru	Right	U-Turn	Left	Thru	Right		
3:00 PM	0	3	5	5	0	1	4	0	0	1	0	1	0	0	0	7	27	114
3:15 PM	0	0	4	2	0	0	8	1	0	2	0	0	0	1	0	1	19	
3:30 PM	0	1	3	4	0	0	11	3	0	6	0	0	0	0	0	6	34	
3:45 PM	0	0	1	15	0	0	3	0	0	14	0	0	0	0	0	1	34	
Count Total	0	4	13	26	0	1	26	4	0	23	0	1	0	1	0	15	114	
Peak Hour	0	4	13	26	0	1	26	4	0	23	0	1	0	1	0	15	114	

Traffic Counts - Heavy Vehicles, Bicycles on Road, and Pedestrians/Bicycles in Crosswalk

Interval Start Time	Heavy Vehicles					Interval Start Time	Bicycles on Roadway					Interval Start Time	Pedestrians/Bicycles on Crosswalk				
	EB	NB	WB	SB	Total		EB	NB	WB	SB	Total		EB	NB	WB	SB	Total
3:00 PM	1	0	1	0	2	3:00 PM	0	0	0	0	0	3:00 PM	0	0	0	0	0
3:15 PM	0	0	1	0	1	3:15 PM	0	0	0	0	0	3:15 PM	0	0	0	0	0
3:30 PM	0	0	0	0	0	3:30 PM	0	0	0	0	0	3:30 PM	0	0	0	0	0
3:45 PM	0	0	0	0	0	3:45 PM	0	0	0	0	0	3:45 PM	0	0	0	0	0
Count Total	1	0	2	0	3	Count Total	0	0	0	0	0	Count Total	0	0	0	0	0
Peak Hour	1	0	2	0	3	Peak Hour	0	0	0	0	0	Peak Hour	0	0	0	0	0

ALL TRAFFIC DATA SERVICES
(303) 216-2439
www.alltrafficdata.net

Location: 1 E MERCER WAY & SE 40TH ST PM
Date: Wednesday, March 27, 2024
Peak Hour: 04:30 PM - 05:30 PM
Peak 15-Minutes: 05:00 PM - 05:15 PM

Peak Hour

Motorized Vehicles

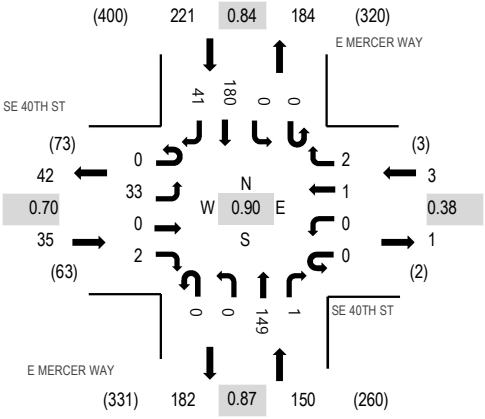

Note: Total study counts contained in parentheses.

	HV%	PHF
EB	0.0%	0.70
WB	0.0%	0.38
NB	0.0%	0.87
SB	0.0%	0.84
All	0.0%	0.90

Heavy Vehicles

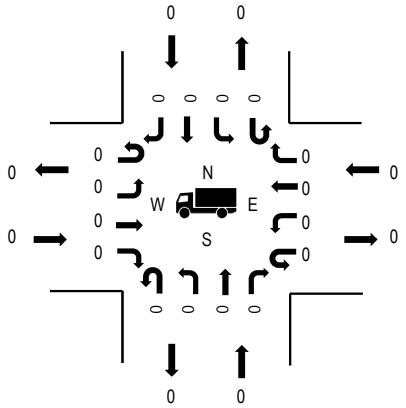

Pedestrians/Bicycles in Crosswalk

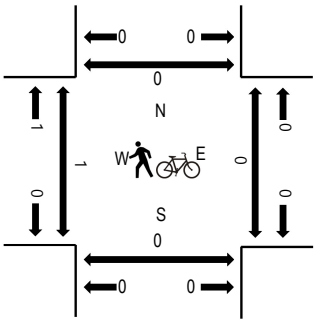

Traffic Counts - Motorized Vehicles

Interval Start Time	SE 40TH ST Eastbound				SE 40TH ST Westbound				E MERCER WAY Northbound				E MERCER WAY Southbound				Total	Rolling Hour
	U-Turn	Left	Thru	Right	U-Turn	Left	Thru	Right	U-Turn	Left	Thru	Right	U-Turn	Left	Thru	Right		
4:00 PM	0	5	0	0	0	0	0	0	0	0	35	0	0	0	30	4	74	342
4:15 PM	0	2	0	0	0	0	0	0	0	0	29	0	0	0	35	7	73	382
4:30 PM	0	7	0	1	0	0	0	1	0	0	31	0	0	0	40	11	91	409
4:45 PM	0	9	0	0	0	0	0	0	0	0	39	0	0	0	44	12	104	405
5:00 PM	0	8	0	1	0	0	1	1	0	0	36	1	0	0	56	10	114	384
5:15 PM	0	9	0	0	0	0	0	0	0	0	43	0	0	0	40	8	100	
5:30 PM	0	7	0	0	0	0	0	0	0	0	27	0	0	1	41	11	87	
5:45 PM	0	12	0	2	0	0	0	0	0	0	19	0	0	0	41	9	83	
Count Total	0	59	0	4	0	0	1	2	0	0	259	1	0	1	327	72	726	
Peak Hour	0	33	0	2	0	0	1	2	0	0	149	1	0	0	180	41	409	

Traffic Counts - Heavy Vehicles, Bicycles on Road, and Pedestrians/Bicycles in Crosswalk

Interval Start Time	Heavy Vehicles					Interval Start Time	Bicycles on Roadway					Interval Start Time	Pedestrians/Bicycles on Crosswalk				
	EB	NB	WB	SB	Total		EB	NB	WB	SB	Total		EB	NB	WB	SB	Total
4:00 PM	0	0	0	0	0	4:00 PM	0	0	0	0	0	4:00 PM	0	0	0	0	0
4:15 PM	0	0	0	0	0	4:15 PM	1	0	0	0	1	4:15 PM	0	0	0	0	0
4:30 PM	0	0	0	0	0	4:30 PM	0	0	0	0	0	4:30 PM	0	0	0	0	0
4:45 PM	0	0	0	0	0	4:45 PM	0	0	0	0	0	4:45 PM	1	0	0	0	1
5:00 PM	0	0	0	0	0	5:00 PM	0	1	0	1	2	5:00 PM	0	0	0	0	0
5:15 PM	0	0	0	0	0	5:15 PM	0	2	0	3	5	5:15 PM	0	0	0	0	0
5:30 PM	0	0	0	0	0	5:30 PM	1	0	0	2	3	5:30 PM	0	0	0	0	0
5:45 PM	0	0	0	0	0	5:45 PM	0	2	0	0	2	5:45 PM	0	0	0	0	0
Count Total	0	0	0	0	0	Count Total	2	5	0	6	13	Count Total	1	0	0	0	1
Peak Hour	0	0	0	0	0	Peak Hour	0	3	0	4	7	Peak Hour	1	0	0	0	1

ALL TRAFFIC DATA SERVICES
(303) 216-2439
www.alltrafficdata.net

Location: 2 E MERCER WAY & FRONTAGE RD PM
Date: Wednesday, March 27, 2024
Peak Hour: 04:30 PM - 05:30 PM
Peak 15-Minutes: 05:00 PM - 05:15 PM

Peak Hour

Motorized Vehicles

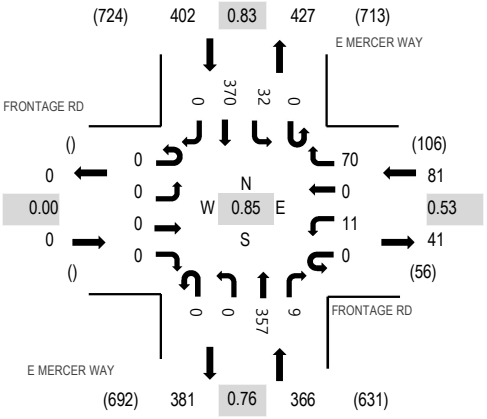

Note: Total study counts contained in parentheses.

	HV%	PHF
EB	0.0%	0.00
WB	0.0%	0.53
NB	0.0%	0.76
SB	0.0%	0.83
All	0.0%	0.85

Heavy Vehicles

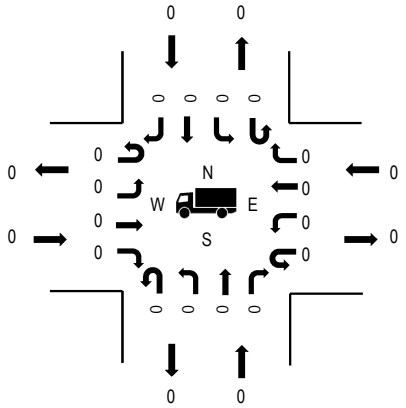

Pedestrians/Bicycles in Crosswalk

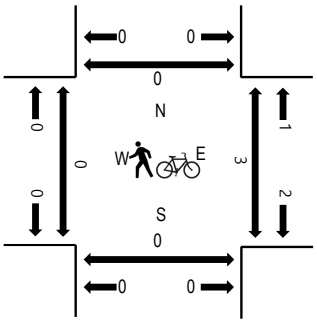

Traffic Counts - Motorized Vehicles

Interval Start Time	FRONTAGE RD Eastbound				FRONTAGE RD Westbound				E MERCER WAY Northbound				E MERCER WAY Southbound				Total	Rolling Hour
	U-Turn	Left	Thru	Right	U-Turn	Left	Thru	Right	U-Turn	Left	Thru	Right	U-Turn	Left	Thru	Right		
4:00 PM	0	0	0	0	0	2	0	14	0	0	64	0	0	4	67	0	151	711
4:15 PM	0	0	0	0	0	1	0	3	0	0	52	0	0	3	77	0	136	809
4:30 PM	0	0	0	0	0	0	0	6	0	0	73	1	0	7	93	0	180	849
4:45 PM	0	0	0	0	0	7	0	31	0	0	77	8	0	17	104	0	244	845
5:00 PM	0	0	0	0	0	3	0	27	0	0	125	0	0	6	88	0	249	750
5:15 PM	0	0	0	0	0	1	0	6	0	0	82	0	0	2	85	0	176	
5:30 PM	0	0	0	0	0	1	0	3	0	0	88	0	0	3	81	0	176	
5:45 PM	0	0	0	0	0	0	0	1	0	0	61	0	0	5	82	0	149	
Count Total	0	0	0	0	0	15	0	91	0	0	622	9	0	47	677	0	1,461	
Peak Hour	0	0	0	0	0	11	0	70	0	0	357	9	0	32	370	0	849	

Traffic Counts - Heavy Vehicles, Bicycles on Road, and Pedestrians/Bicycles in Crosswalk

Interval Start Time	Heavy Vehicles					Interval Start Time	Bicycles on Roadway					Interval Start Time	Pedestrians/Bicycles on Crosswalk				
	EB	NB	WB	SB	Total		EB	NB	WB	SB	Total		EB	NB	WB	SB	Total
4:00 PM	0	0	0	0	0	4:00 PM	0	1	0	0	1	4:00 PM	0	0	0	0	0
4:15 PM	0	0	0	0	0	4:15 PM	0	0	0	0	0	4:15 PM	0	0	0	0	0
4:30 PM	0	0	0	0	0	4:30 PM	0	0	0	0	0	4:30 PM	0	0	2	0	2
4:45 PM	0	0	0	0	0	4:45 PM	0	0	0	0	0	4:45 PM	0	0	1	0	1
5:00 PM	0	0	0	0	0	5:00 PM	0	1	0	0	1	5:00 PM	0	0	0	0	0
5:15 PM	0	0	0	0	0	5:15 PM	0	2	0	3	5	5:15 PM	0	0	0	0	0
5:30 PM	0	0	0	0	0	5:30 PM	0	0	0	1	1	5:30 PM	0	0	0	0	0
5:45 PM	0	0	0	0	0	5:45 PM	0	2	0	1	3	5:45 PM	0	0	4	0	4
Count Total	0	0	0	0	0	Count Total	0	6	0	5	11	Count Total	0	0	7	0	7
Peak Hour	0	0	0	0	0	Peak Hour	0	3	0	3	6	Peak Hour	0	0	3	0	3

ALL TRAFFIC DATA SERVICES
(303) 216-2439
www.alltrafficdata.net

Location: 3 E MERCER WAY & SE 36TH ST PM
Date: Wednesday, March 27, 2024
Peak Hour: 04:45 PM - 05:45 PM
Peak 15-Minutes: 05:00 PM - 05:15 PM

Peak Hour

Motorized Vehicles

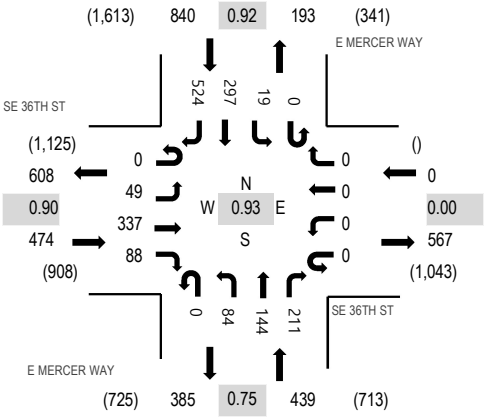

Note: Total study counts contained in parentheses.

	HV%	PHF
EB	0.0%	0.90
WB	0.0%	0.00
NB	0.0%	0.75
SB	0.1%	0.92
All	0.1%	0.93

Heavy Vehicles

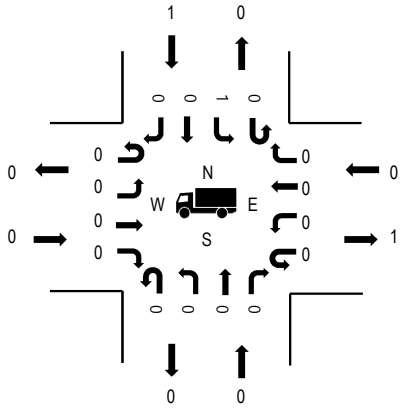

Pedestrians/Bicycles in Crosswalk

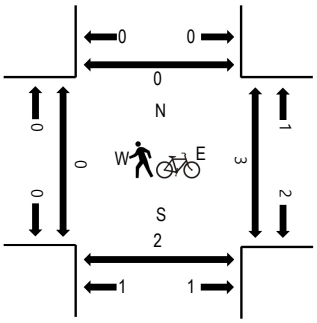

Traffic Counts - Motorized Vehicles

Interval Start Time	SE 36TH ST Eastbound				SE 36TH ST Westbound				E MERCER WAY Northbound				E MERCER WAY Southbound				Total	Rolling Hour
	U-Turn	Left	Thru	Right	U-Turn	Left	Thru	Right	U-Turn	Left	Thru	Right	U-Turn	Left	Thru	Right		
4:00 PM	0	16	97	11	0	0	0	0	0	18	25	35	0	3	62	90	357	1,576
4:15 PM	0	23	75	13	0	0	0	0	0	11	9	35	0	6	65	125	362	1,692
4:30 PM	0	19	72	11	0	0	0	0	0	13	28	37	0	5	90	121	396	1,747
4:45 PM	0	11	69	39	0	0	0	0	0	27	33	49	0	3	86	144	461	1,753
5:00 PM	0	16	95	20	0	0	0	0	0	26	49	71	0	3	72	121	473	1,658
5:15 PM	0	13	80	13	0	0	0	0	0	19	29	46	0	6	73	138	417	
5:30 PM	0	9	93	16	0	0	0	0	0	12	33	45	0	7	66	121	402	
5:45 PM	0	8	72	17	0	0	0	0	0	13	20	30	0	9	71	126	366	
Count Total	0	115	653	140	0	0	0	0	0	139	226	348	0	42	585	986	3,234	
Peak Hour	0	49	337	88	0	0	0	0	0	84	144	211	0	19	297	524	1,753	

Traffic Counts - Heavy Vehicles, Bicycles on Road, and Pedestrians/Bicycles in Crosswalk

Interval Start Time	Heavy Vehicles					Interval Start Time	Bicycles on Roadway					Interval Start Time	Pedestrians/Bicycles on Crosswalk				
	EB	NB	WB	SB	Total		EB	NB	WB	SB	Total		EB	NB	WB	SB	Total
4:00 PM	0	0	0	0	0	4:00 PM	1	1	0	1	3	4:00 PM	0	0	0	0	0
4:15 PM	0	0	0	0	0	4:15 PM	0	0	0	0	0	4:15 PM	0	0	0	0	0
4:30 PM	0	0	0	0	0	4:30 PM	0	0	0	1	1	4:30 PM	0	0	0	0	0
4:45 PM	0	0	0	0	0	4:45 PM	1	0	0	0	1	4:45 PM	0	1	2	0	3
5:00 PM	0	0	0	0	0	5:00 PM	0	1	0	1	2	5:00 PM	0	0	0	0	0
5:15 PM	0	0	0	0	0	5:15 PM	2	2	0	3	7	5:15 PM	0	1	1	0	2
5:30 PM	0	0	0	1	1	5:30 PM	2	0	0	1	3	5:30 PM	0	0	0	0	0
5:45 PM	0	0	0	0	0	5:45 PM	1	2	0	0	3	5:45 PM	0	0	4	0	4
Count Total	0	0	0	1	1	Count Total	7	6	0	7	20	Count Total	0	2	7	0	9
Peak Hour	0	0	0	1	1	Peak Hour	5	3	0	5	13	Peak Hour	0	2	3	0	5

ALL TRAFFIC DATA SERVICES
(303) 216-2439
www.alltrafficdata.net

Location: 4 E MERCER WAY & I-90 EB OFF RAMP PM
Date: Wednesday, March 27, 2024
Peak Hour: 04:30 PM - 05:30 PM
Peak 15-Minutes: 04:45 PM - 05:00 PM

Peak Hour

Motorized Vehicles

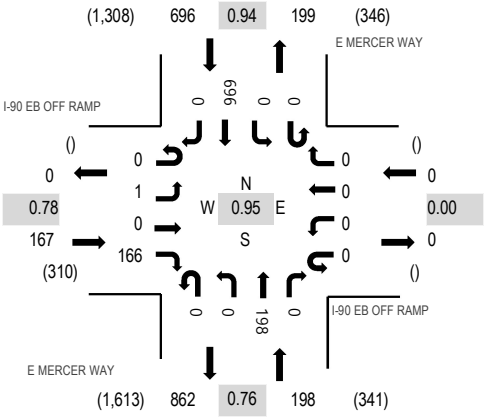

Note: Total study counts contained in parentheses.

	HV%	PHF
EB	0.0%	0.78
WB	0.0%	0.00
NB	0.0%	0.76
SB	0.0%	0.94
All	0.0%	0.95

Heavy Vehicles

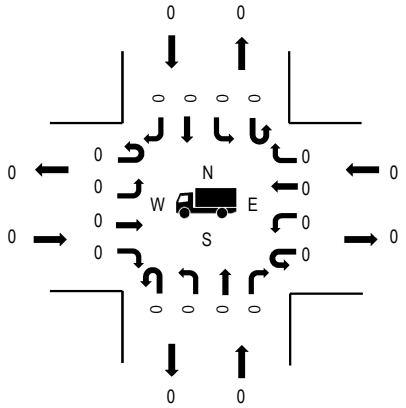

Pedestrians/Bicycles in Crosswalk

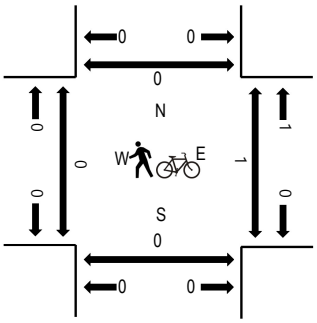

Traffic Counts - Motorized Vehicles

Interval Start Time	I-90 EB OFF RAMP Eastbound				I-90 EB OFF RAMP Westbound				E MERCER WAY Northbound				E MERCER WAY Southbound				Total	Rolling Hour
	U-Turn	Left	Thru	Right	U-Turn	Left	Thru	Right	U-Turn	Left	Thru	Right	U-Turn	Left	Thru	Right		
4:00 PM	0	1	0	40	0	0	0	0	0	0	41	0	0	0	115	0	197	967
4:15 PM	0	1	0	40	0	0	0	0	0	0	32	0	0	0	156	0	229	1,031
4:30 PM	0	0	0	40	0	0	0	0	0	0	47	0	0	0	176	0	263	1,061
4:45 PM	0	1	0	57	0	0	0	0	0	0	44	0	0	0	176	0	278	1,034
5:00 PM	0	0	0	38	0	0	0	0	0	0	65	0	0	0	158	0	261	992
5:15 PM	0	0	0	31	0	0	0	0	0	0	42	0	0	0	186	0	259	
5:30 PM	0	0	0	31	0	0	0	0	0	0	42	0	0	0	163	0	236	
5:45 PM	0	2	0	28	0	0	0	0	0	0	28	0	0	0	178	0	236	
Count Total	0	5	0	305	0	0	0	0	0	0	341	0	0	0	1,308	0	1,959	
Peak Hour	0	1	0	166	0	0	0	0	0	0	198	0	0	0	696	0	1,061	

Traffic Counts - Heavy Vehicles, Bicycles on Road, and Pedestrians/Bicycles in Crosswalk

Interval Start Time	Heavy Vehicles					Interval Start Time	Bicycles on Roadway					Interval Start Time	Pedestrians/Bicycles on Crosswalk				
	EB	NB	WB	SB	Total		EB	NB	WB	SB	Total		EB	NB	WB	SB	Total
4:00 PM	0	0	0	0	0	4:00 PM	0	2	0	1	3	4:00 PM	0	0	0	0	0
4:15 PM	0	0	0	0	0	4:15 PM	0	0	0	0	0	4:15 PM	0	0	0	0	0
4:30 PM	0	0	0	0	0	4:30 PM	0	0	0	1	1	4:30 PM	0	0	0	0	0
4:45 PM	0	0	0	0	0	4:45 PM	0	1	0	0	1	4:45 PM	0	0	1	0	1
5:00 PM	0	0	0	0	0	5:00 PM	0	0	0	1	1	5:00 PM	0	0	0	0	0
5:15 PM	0	0	0	0	0	5:15 PM	0	1	0	3	4	5:15 PM	0	0	0	0	0
5:30 PM	0	0	0	1	1	5:30 PM	0	1	0	1	2	5:30 PM	0	0	0	0	0
5:45 PM	0	0	0	0	0	5:45 PM	0	2	0	0	2	5:45 PM	0	0	0	0	0
Count Total	0	0	0	1	1	Count Total	0	7	0	7	14	Count Total	0	0	1	0	1
Peak Hour	0	0	0	0	0	Peak Hour	0	2	0	5	7	Peak Hour	0	0	1	0	1

ALL TRAFFIC DATA SERVICES
(303) 216-2439
www.alltrafficdata.net

Location: 5 E MERCER WAY & I-90 WB RAMPS PM
Date: Wednesday, March 27, 2024
Peak Hour: 04:30 PM - 05:30 PM
Peak 15-Minutes: 05:00 PM - 05:15 PM

Peak Hour

Motorized Vehicles

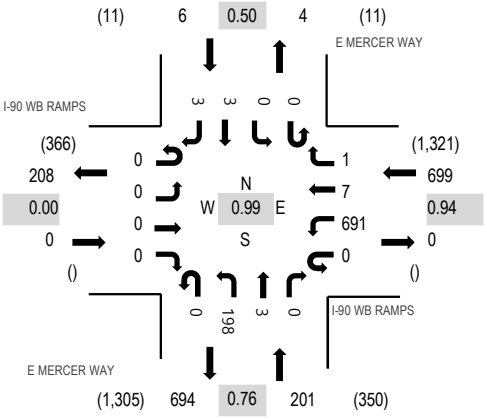

Note: Total study counts contained in parentheses.

	HV%	PHF
EB	0.0%	0.00
WB	0.0%	0.94
NB	0.0%	0.76
SB	0.0%	0.50
All	0.0%	0.99

Heavy Vehicles

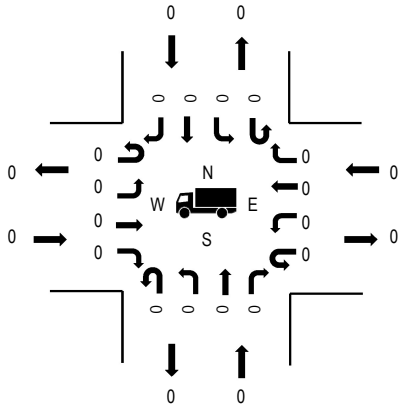

Pedestrians/Bicycles in Crosswalk

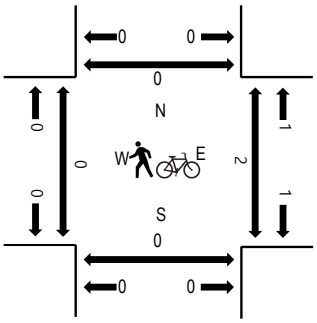

Traffic Counts - Motorized Vehicles

Interval Start Time	I-90 WB RAMPS Eastbound				I-90 WB RAMPS Westbound				E MERCER WAY Northbound				E MERCER WAY Southbound				Total	Rolling Hour
	U-Turn	Left	Thru	Right	U-Turn	Left	Thru	Right	U-Turn	Left	Thru	Right	U-Turn	Left	Thru	Right		
4:00 PM	0	0	0	0	0	116	1	0	0	45	0	0	0	0	0	0	162	802
4:15 PM	0	0	0	0	0	153	1	2	0	31	1	0	0	0	1	0	189	868
4:30 PM	0	0	0	0	0	174	3	1	0	45	1	0	0	0	0	0	224	906
4:45 PM	0	0	0	0	0	178	0	0	0	46	1	0	0	0	0	2	227	892
5:00 PM	0	0	0	0	0	156	2	0	0	66	0	0	0	0	3	1	228	880
5:15 PM	0	0	0	0	0	183	2	0	0	41	1	0	0	0	0	0	227	
5:30 PM	0	0	0	0	0	163	3	1	0	42	0	0	0	0	0	1	210	
5:45 PM	0	0	0	0	0	176	5	1	0	28	2	0	0	0	2	1	215	
Count Total	0	0	0	0	0	1,299	17	5	0	344	6	0	0	0	6	5	1,682	
Peak Hour	0	0	0	0	0	691	7	1	0	198	3	0	0	0	3	3	906	

Traffic Counts - Heavy Vehicles, Bicycles on Road, and Pedestrians/Bicycles in Crosswalk

Interval Start Time	Heavy Vehicles					Interval Start Time	Bicycles on Roadway					Interval Start Time	Pedestrians/Bicycles on Crosswalk				
	EB	NB	WB	SB	Total		EB	NB	WB	SB	Total		EB	NB	WB	SB	Total
4:00 PM	0	0	0	0	0	4:00 PM	0	1	0	1	2	4:00 PM	0	0	0	0	0
4:15 PM	0	0	0	0	0	4:15 PM	0	1	0	0	1	4:15 PM	0	0	0	0	0
4:30 PM	0	0	0	0	0	4:30 PM	0	0	0	1	1	4:30 PM	0	0	0	0	0
4:45 PM	0	0	0	0	0	4:45 PM	0	1	0	0	1	4:45 PM	0	0	1	0	1
5:00 PM	0	0	0	0	0	5:00 PM	0	0	0	1	1	5:00 PM	0	0	0	0	0
5:15 PM	0	0	0	0	0	5:15 PM	0	1	0	3	4	5:15 PM	0	0	1	0	1
5:30 PM	0	0	1	0	1	5:30 PM	0	1	0	1	2	5:30 PM	0	0	1	1	2
5:45 PM	0	0	0	0	0	5:45 PM	0	2	0	0	2	5:45 PM	0	0	1	0	1
Count Total	0	0	1	0	1	Count Total	0	7	0	7	14	Count Total	0	0	4	1	5
Peak Hour	0	0	0	0	0	Peak Hour	0	2	0	5	7	Peak Hour	0	0	2	0	2

ALL TRAFFIC DATA SERVICES
(303) 216-2439
www.alltrafficdata.net

Location: 6 SITE ACCESS & FRONTAGE RD PM
Date: Wednesday, March 27, 2024
Peak Hour: 04:30 PM - 05:30 PM
Peak 15-Minutes: 04:45 PM - 05:00 PM

Peak Hour

Motorized Vehicles

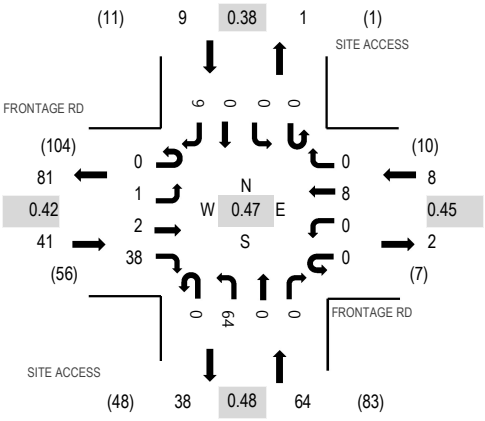

Note: Total study counts contained in parentheses.

	HV%	PHF
EB	0.0%	0.42
WB	0.0%	0.45
NB	0.0%	0.48
SB	0.0%	0.38
All	0.0%	0.47

Heavy Vehicles

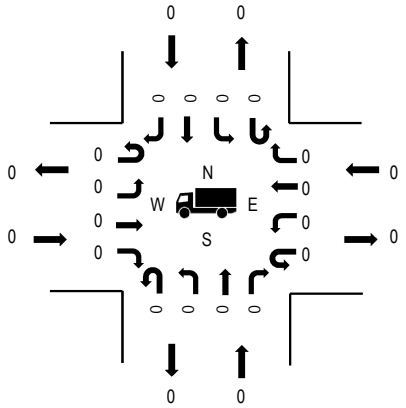

Pedestrians/Bicycles in Crosswalk

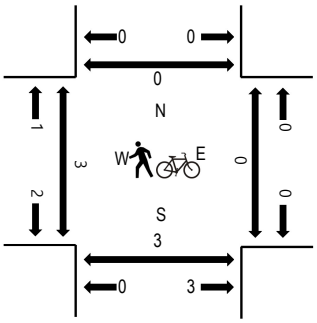

Traffic Counts - Motorized Vehicles

Interval Start Time	FRONTAGE RD Eastbound				FRONTAGE RD Westbound				SITE ACCESS Northbound				SITE ACCESS Southbound				Total	Rolling Hour
	U-Turn	Left	Thru	Right	U-Turn	Left	Thru	Right	U-Turn	Left	Thru	Right	U-Turn	Left	Thru	Right		
4:00 PM	0	0	0	4	0	0	0	0	0	13	0	0	0	0	0	1	18	105
4:15 PM	0	0	2	1	0	0	0	0	0	3	0	0	0	0	0	1	7	120
4:30 PM	0	1	0	7	0	0	1	0	0	6	0	0	0	0	0	0	15	122
4:45 PM	0	0	1	24	0	0	5	0	0	33	0	0	0	0	0	2	65	114
5:00 PM	0	0	0	6	0	0	1	0	0	20	0	0	0	0	0	6	33	55
5:15 PM	0	0	1	1	0	0	1	0	0	5	0	0	0	0	0	1	9	
5:30 PM	0	0	2	1	0	0	2	0	0	2	0	0	0	0	0	0	7	
5:45 PM	0	0	1	4	0	0	0	0	0	1	0	0	0	0	0	0	6	
Count Total	0	1	7	48	0	0	10	0	0	83	0	0	0	0	0	11	160	
Peak Hour	0	1	2	38	0	0	8	0	0	64	0	0	0	0	0	9	122	

Traffic Counts - Heavy Vehicles, Bicycles on Road, and Pedestrians/Bicycles in Crosswalk

Interval Start Time	Heavy Vehicles					Interval Start Time	Bicycles on Roadway					Interval Start Time	Pedestrians/Bicycles on Crosswalk				
	EB	NB	WB	SB	Total		EB	NB	WB	SB	Total		EB	NB	WB	SB	Total
4:00 PM	0	0	0	0	0	4:00 PM	0	0	0	0	0	4:00 PM	0	2	0	0	2
4:15 PM	0	0	0	0	0	4:15 PM	0	0	0	0	0	4:15 PM	0	1	0	0	1
4:30 PM	0	0	0	0	0	4:30 PM	0	0	0	0	0	4:30 PM	2	3	0	0	5
4:45 PM	0	0	0	0	0	4:45 PM	0	0	0	0	0	4:45 PM	1	0	0	0	1
5:00 PM	0	0	0	0	0	5:00 PM	0	0	0	0	0	5:00 PM	0	0	0	0	0
5:15 PM	0	0	0	0	0	5:15 PM	0	0	0	0	0	5:15 PM	0	0	0	0	0
5:30 PM	0	0	0	0	0	5:30 PM	0	0	0	0	0	5:30 PM	0	0	0	0	0
5:45 PM	0	0	0	0	0	5:45 PM	0	0	0	0	0	5:45 PM	1	0	0	0	1
Count Total	0	0	0	0	0	Count Total	0	0	0	0	0	Count Total	4	6	0	0	10
Peak Hour	0	0	0	0	0	Peak Hour	0	0	0	0	0	Peak Hour	3	3	0	0	6

Appendix B: LOS Definitions

Highway Capacity Manual 7th Edition

Signalized intersection level of service (LOS) is defined in terms of a weighted average control delay for the entire intersection. Control delay quantifies the increase in travel time that a vehicle experiences due to the traffic signal control as well as provides a surrogate measure for driver discomfort and fuel consumption. Signalized intersection LOS is stated in terms of average control delay per vehicle (in seconds) during a specified time period (e.g., weekday PM peak hour). Control delay is a complex measure based on many variables, including signal phasing and coordination (i.e., progression of movements through the intersection and along the corridor), signal cycle length, and traffic volumes with respect to intersection capacity and resulting queues. Table 1 summarizes the LOS criteria for signalized intersections, as described in the *Highway Capacity Manual* 7th Edition (Transportation Research Board, 2022).

Table 1. Level of Service Criteria for Signalized Intersections

Level of Service	Average Control Delay (seconds/vehicle)	General Description
A	≤10	Free Flow
B	>10 – 20	Stable Flow (slight delays)
C	>20 – 35	Stable flow (acceptable delays)
D	>35 – 55	Approaching unstable flow (tolerable delay, occasionally wait through more than one signal cycle before proceeding)
E	>55 – 80	Unstable flow (intolerable delay)
F[1]	>80	Forced flow (congested and queues fail to clear)

Source: *Highway Capacity Manual 7th Edition*, Transportation Research Board, 2022, respectively.

1. If the volume-to-capacity (v/c) ratio for a lane group exceeds 1.0 LOS F is assigned to the individual lane group. LOS for overall approach or intersection is determined solely by the control delay.

Unsignalized intersection LOS criteria can be further reduced into two intersection types: all-way stop and two-way stop controlled. All-way stop controlled intersection LOS is expressed in terms of the weighted average control delay of the overall intersection or by approach. Two-way stop-controlled intersection LOS is defined in terms of the average control delay for each minor-street movement (or shared movement) as well as major-street left-turns. This approach is because major-street through vehicles are assumed to experience zero delay, a weighted average of all movements results in very low overall average delay, and this calculated low delay could mask deficiencies of minor movements. Table 2 shows LOS criteria for unsignalized intersections.

Table 2. Level of Service Criteria for Unsignalized Intersections

Level of Service	Average Control Delay (seconds/vehicle)
A	0 – 10
B	>10 – 15
C	>15 – 25
D	>25 – 35
E	>35 – 50
F[1]	>50

Source: *Highway Capacity Manual 7th Edition*, Transportation Research Board, 2022, respectively.

1. If the volume-to-capacity (v/c) ratio exceeds 1.0, LOS F is assigned an individual lane group for all unsignalized intersections, or minor street approach at two-way stop-controlled intersections. Overall intersection LOS is determined solely by control delay.

Highway Capacity Manual, 2000

Signalized intersection level of service (LOS) is defined in terms of the average total vehicle delay of all movements through an intersection. Vehicle delay is a method of quantifying several intangible factors, including driver discomfort, frustration, and lost travel time. Specifically, LOS criteria are stated in terms of average delay per vehicle during a specified time period (for example, the PM peak hour). Vehicle delay is a complex measure based on many variables, including signal phasing (i.e., progression of movements through the intersection), signal cycle length, and traffic volumes with respect to intersection capacity. Table 1 shows LOS criteria for signalized intersections, as described in the *Highway Capacity Manual* (Transportation Research Board, Special Report 209, 2000).

Table 1. Level of Service Criteria for Signalized Intersections

Level of Service	Average Control Delay (sec/veh)	General Description (Signalized Intersections)
A	≤10	Free Flow
B	>10 - 20	Stable Flow (slight delays)
C	>20 - 35	Stable flow (acceptable delays)
D	>35 - 55	Approaching unstable flow (tolerable delay, occasionally wait through more than one signal cycle before proceeding)
E	>55 - 80	Unstable flow (intolerable delay)
F	>80	Forced flow (jammed)

Source: *Highway Capacity Manual*, Transportation Research Board, Special Report 209, 2000.

Unsignalized intersection LOS criteria can be further reduced into two intersection types: all-way stop-controlled and two-way stop-controlled. All-way, stop-controlled intersection LOS is expressed in terms of the average vehicle delay of all of the movements, much like that of a signalized intersection. Two-way, stop-controlled intersection LOS is defined in terms of the average vehicle delay of an individual movement(s). This is because the performance of a two-way, stop-controlled intersection is more closely reflected in terms of its individual movements, rather than its performance overall. For this reason, LOS for a two-way, stop-controlled intersection is defined in terms of its individual movements. With this in mind, total average vehicle delay (i.e., average delay of all movements) for a two-way, stop-controlled intersection should be viewed with discretion. Table 2 shows LOS criteria for unsignalized intersections (both all-way and two-way, stop-controlled).

Table 2. Level of Service Criteria for Unsignalized Intersections

Level of Service	Average Control Delay (sec/veh)
A	0 - 10
B	>10 - 15
C	>15 - 25
D	>25 - 35
E	>35 - 50
F	>50

Source: *Highway Capacity Manual*, Transportation Research Board, Special Report 209, 2000.

Appendix C: LOS Worksheets

Intersection	
Int Delay, s/veh	1

Movement	EBL	EBT	EBR	WBL	WBT	WBR	NBL	NBT	NBR	SBL	SBT	SBR
Lane Configurations												
Traffic Vol, veh/h	25	0	3	0	0	2	2	180	0	1	120	25
Future Vol, veh/h	25	0	3	0	0	2	2	180	0	1	120	25
Conflicting Peds, #/hr	2	0	2	0	0	0	2	0	0	0	0	2
Sign Control	Stop	Stop	Stop	Stop	Stop	Stop	Free	Free	Free	Free	Free	Free
RT Channelized	-	-	None	-	-	None	-	-	None	-	-	None
Storage Length	-	-	-	-	-	-	-	-	-	-	-	-
Veh in Median Storage, #	-	0	-	-	0	-	-	0	-	-	0	-
Grade, %	-	0	-	-	0	-	-	0	-	-	0	-
Peak Hour Factor	95	95	95	95	95	95	95	95	95	95	95	95
Heavy Vehicles, %	0	0	0	0	0	0	0	0	0	0	0	0
Mvmt Flow	26	0	3	0	0	2	2	189	0	1	126	26

Major/Minor	Minor2			Minor1			Major1			Major2		
Conflicting Flow All	339	337	143	324	350	191	155	0	0	189	0	0
Stage 1	144	144	-	194	194	-	-	-	-	-	-	-
Stage 2	196	194	-	130	157	-	-	-	-	-	-	-
Critical Hdwy	7.1	6.5	6.2	7.1	6.5	6.2	4.1	-	-	4.1	-	-
Critical Hdwy Stg 1	6.1	5.5	-	6.1	5.5	-	-	-	-	-	-	-
Critical Hdwy Stg 2	6.1	5.5	-	6.1	5.5	-	-	-	-	-	-	-
Follow-up Hdwy	3.5	4	3.3	3.5	4	3.3	2.2	-	-	2.2	-	-
Pot Cap-1 Maneuver	618	587	909	633	577	855	1438	-	-	1397	-	-
Stage 1	864	782	-	813	744	-	-	-	-	-	-	-
Stage 2	811	744	-	878	772	-	-	-	-	-	-	-
Platoon blocked, %								-	-		-	-
Mov Cap-1 Maneuver	613	584	906	628	575	854	1435	-	-	1397	-	-
Mov Cap-2 Maneuver	613	584	-	628	575	-	-	-	-	-	-	-
Stage 1	862	780	-	811	743	-	-	-	-	-	-	-
Stage 2	806	743	-	873	770	-	-	-	-	-	-	-

Approach	EB	WB	NB	SB
HCM Control Delay, s/v	10.94	9.23	0.08	0.05
HCM LOS	B	A		

Minor Lane/Major Mvmt	NBL	NBT	NBR	EBLn1	WBLn1	SBL	SBT	SBR
Capacity (veh/h)	20	-	-	635	854	12	-	-
HCM Lane V/C Ratio	0.001	-	-	0.046	0.002	0.001	-	-
HCM Control Delay (s/veh)	7.5	0	-	10.9	9.2	7.6	0	-
HCM Lane LOS	A	A	-	B	A	A	A	-
HCM 95th %tile Q(veh)	0	-	-	0.1	0	0	-	-

Intersection	
Int Delay, s/veh	0.8

Movement	WBL	WBR	NBT	NBR	SBL	SBT
Lane Configurations						
Traffic Vol, veh/h	1	35	455	0	35	440
Future Vol, veh/h	1	35	455	0	35	440
Conflicting Peds, #/hr	3	3	0	3	3	0
Sign Control	Stop	Stop	Free	Free	Free	Free
RT Channelized	-	None	-	None	-	None
Storage Length	0	-	-	-	-	-
Veh in Median Storage, #	0	-	0	-	-	0
Grade, %	0	-	0	-	-	0
Peak Hour Factor	88	88	88	88	88	88
Heavy Vehicles, %	11	11	0	0	1	1
Mvmt Flow	1	40	517	0	40	500

Major/Minor	Minor1		Major1		Major2	
Conflicting Flow All	1103	523	0	0	520	0
Stage 1	520	-	-	-	-	-
Stage 2	583	-	-	-	-	-
Critical Hdwy	6.51	6.31	-	-	4.11	-
Critical Hdwy Stg 1	5.51	-	-	-	-	-
Critical Hdwy Stg 2	5.51	-	-	-	-	-
Follow-up Hdwy	3.599	3.399	-	-	2.209	-
Pot Cap-1 Maneuver	225	537	-	-	1051	-
Stage 1	579	-	-	-	-	-
Stage 2	541	-	-	-	-	-
Platoon blocked, %			-	-		-
Mov Cap-1 Maneuver	212	534	-	-	1048	-
Mov Cap-2 Maneuver	212	-	-	-	-	-
Stage 1	577	-	-	-	-	-
Stage 2	511	-	-	-	-	-

Approach	WB	NB	SB
HCM Control Delay, s/v	12.64	0	0.63
HCM LOS	B		

Minor Lane/Major Mvmt	NBT	NBR	WBLn1	SBL	SBT
Capacity (veh/h)	-	-	512	133	-
HCM Lane V/C Ratio	-	-	0.08	0.038	-
HCM Control Delay (s/veh)	-	-	12.6	8.6	0
HCM Lane LOS	-	-	B	A	A
HCM 95th %tile Q(veh)	-	-	0.3	0.1	-

Movement	EBL	EBT	EBR	WBL	WBT	WBR	NBL	NBT	NBR	SBL	SBT	SBR
Lane Configurations												
Traffic Volume (vph)	35	370	80	0	0	0	75	135	280	30	395	590
Future Volume (vph)	35	370	80	0	0	0	75	135	280	30	395	590
Ideal Flow (vphpl)	1900	1900	1900	1900	1900	1900	1900	1900	1900	1900	1900	1900
Total Lost time (s)		8.5	8.5				5.5	5.5		5.9	5.5	5.5
Lane Util. Factor		1.00	1.00				1.00	1.00		1.00	1.00	1.00
Frpb, ped/bikes		1.00	0.97				1.00	0.97		1.00	1.00	0.97
Flpb, ped/bikes		0.99	1.00				0.99	1.00		1.00	1.00	1.00
Frt		1.00	0.85				1.00	0.89		1.00	1.00	0.85
Flt Protected		0.99	1.00				0.95	1.00		0.95	1.00	1.00
Satd. Flow (prot)		1891	1570				1779	1645		1805	1900	1576
Flt Permitted		0.99	1.00				0.51	1.00		0.20	1.00	1.00
Satd. Flow (perm)		1891	1570				971	1645		391	1900	1576
Peak-hour factor, PHF	0.95	0.95	0.95	0.95	0.95	0.95	0.95	0.95	0.95	0.95	0.95	0.95
Adj. Flow (vph)	37	389	84	0	0	0	79	142	295	32	416	621
RTOR Reduction (vph)	0	0	55	0	0	0	0	68	0	0	0	316
Lane Group Flow (vph)	0	426	29	0	0	0	79	369	0	32	416	305
Confl. Peds. (#/hr)	2		4	8		6	4		8	6		2
Heavy Vehicles (%)	0%	0%	0%	0%	0%	0%	1%	1%	1%	0%	0%	0%
Turn Type	Perm	NA	Perm				Perm	NA		pm+pt	NA	Perm
Protected Phases		4						2		1	6	
Permitted Phases	4		4				2			6		6
Actuated Green, G (s)		32.8	32.8				26.7	26.7		42.2	42.2	42.2
Effective Green, g (s)		29.8	29.8				26.7	26.7		42.2	42.2	42.2
Actuated g/C Ratio		0.35	0.35				0.31	0.31		0.49	0.49	0.49
Clearance Time (s)		5.5	5.5				5.5	5.5		5.9	5.5	5.5
Vehicle Extension (s)		6.0	6.0				3.0	3.0		3.0	3.0	3.0
Lane Grp Cap (vph)		655	544				301	510		349	932	773
v/s Ratio Prot								c0.22		0.01	c0.22	
v/s Ratio Perm		0.23	0.02				0.08			0.03		0.19
v/c Ratio		0.65	0.05				0.26	0.72		0.09	0.44	0.39
Uniform Delay, d1		23.7	18.7				22.2	26.3		13.6	14.2	13.8
Progression Factor		1.00	1.00				1.00	1.00		0.92	0.88	0.81
Incremental Delay, d2		3.6	0.1				0.4	5.0		0.1	0.3	0.3
Delay (s)		27.4	18.8				22.7	31.3		12.7	13.0	11.6
Level of Service		C	B				C	C		B	B	B
Approach Delay (s/veh)		25.9			0.0			30.0			12.1	
Approach LOS		C			A			C			B	

Intersection Summary			
HCM 2000 Control Delay (s/veh)	20.0	HCM 2000 Level of Service	B
HCM 2000 Volume to Capacity ratio	0.67		
Actuated Cycle Length (s)	86.0	Sum of lost time (s)	19.9
Intersection Capacity Utilization	73.7%	ICU Level of Service	D
Analysis Period (min)	15		

c Critical Lane Group

Movement	EBL	EBR	NBL	NBT	SBT	SBR
Lane Configurations						
Traffic Volume (vph)	2	265	0	175	745	0
Future Volume (vph)	2	265	0	175	745	0
Ideal Flow (vphpl)	1900	1900	1900	1900	1900	1900
Total Lost time (s)	5.9	5.9		5.5	5.5	
Lane Util. Factor	1.00	1.00		1.00	0.95	
Frpb, ped/bikes	1.00	0.98		1.00	1.00	
Flpb, ped/bikes	1.00	1.00		1.00	1.00	
Frt	1.00	0.85		1.00	1.00	
Flt Protected	0.95	1.00		1.00	1.00	
Satd. Flow (prot)	1805	1591		1900	3610	
Flt Permitted	0.95	1.00		1.00	1.00	
Satd. Flow (perm)	1805	1591		1900	3610	
Peak-hour factor, PHF	0.95	0.95	0.95	0.95	0.95	0.95
Adj. Flow (vph)	2	279	0	184	784	0
RTOR Reduction (vph)	0	205	0	0	0	0
Lane Group Flow (vph)	2	74	0	184	784	0
Confl. Peds. (#/hr)	1	1	1			1
Heavy Vehicles (%)	0%	0%	0%	0%	0%	0%
Turn Type	Prot	Perm		NA	NA	
Protected Phases	1			2 4	2 4	
Permitted Phases		1				
Actuated Green, G (s)	9.6	9.6		65.0	65.0	
Effective Green, g (s)	9.6	9.6		65.0	65.0	
Actuated g/C Ratio	0.11	0.11		0.76	0.76	
Clearance Time (s)	5.9	5.9				
Vehicle Extension (s)	3.0	3.0				
Lane Grp Cap (vph)	201	177		1436	2728	
v/s Ratio Prot	0.00			0.10	c0.22	
v/s Ratio Perm		c0.05				
v/c Ratio	0.00	0.41		0.12	0.28	
Uniform Delay, d1	33.9	35.5		2.8	3.2	
Progression Factor	1.00	1.00		0.17	1.00	
Incremental Delay, d2	0.0	1.5		0.0	0.0	
Delay (s)	33.9	37.1		0.5	3.3	
Level of Service	C	D		A	A	
Approach Delay (s/veh)	37.1			0.5	3.3	
Approach LOS	D			A	A	

Intersection Summary			
HCM 2000 Control Delay (s/veh)	10.5	HCM 2000 Level of Service	B
HCM 2000 Volume to Capacity ratio	0.33		
Actuated Cycle Length (s)	86.0	Sum of lost time (s)	16.9
Intersection Capacity Utilization	46.6%	ICU Level of Service	A
Analysis Period (min)	15		

c Critical Lane Group

Movement	EBL	EBT	EBR	WBL	WBT	WBR	NBL	NBT	NBR	SBL	SBT	SBR
Lane Configurations												
Traffic Volume (veh/h)	0	0	0	735	55	3	175	0	0	0	5	1
Future Volume (veh/h)	0	0	0	735	55	3	175	0	0	0	5	1
Initial Q (Qb), veh				0	0	0	0	0	0	0	0	0
Lane Width Adj.				1.00	1.00	1.00	1.00	1.00	1.00	1.00	1.00	1.00
Ped-Bike Adj(A_pbT)				1.00		1.00	1.00		1.00	1.00		1.00
Parking Bus, Adj				1.00	1.00	1.00	1.00	1.00	1.00	1.00	1.00	1.00
Work Zone On Approach					No			No			No	
Adj Sat Flow, veh/h/ln				1900	1900	1900	1900	1900	0	0	1900	1900
Adj Flow Rate, veh/h				758	57	3	180	0	0	0	5	1
Peak Hour Factor				0.97	0.97	0.97	0.97	0.97	0.97	0.97	0.97	0.97
Percent Heavy Veh, %				0	0	0	0	0	0	0	0	0
Cap, veh/h				857	64	3	398	0	0	0	258	52
Arrive On Green				0.58	0.51	0.58	0.17	0.00	0.00	0.00	0.17	0.17
Sat Flow, veh/h				1682	126	7	1409	0	0	0	1537	307
Grp Volume(v), veh/h				818	0	0	180	0	0	0	0	6
Grp Sat Flow(s),veh/h/ln				1815	0	0	1409	0	0	0	0	1845
Q Serve(g_s), s				17.4	0.0	0.0	5.4	0.0	0.0	0.0	0.0	0.1
Cycle Q Clear(g_c), s				17.4	0.0	0.0	5.5	0.0	0.0	0.0	0.0	0.1
Prop In Lane				0.93		0.00	1.00		0.00	0.00		0.17
Lane Grp Cap(c), veh/h				924	0	0	398	0	0	0	0	309
V/C Ratio(X)				0.88	0.00	0.00	0.45	0.00	0.00	0.00	0.00	0.02
Avail Cap(c_a), veh/h				1265	0	0	944	0	0	0	0	1013
HCM Platoon Ratio				1.00	1.00	1.00	1.00	1.00	1.00	1.00	1.00	1.00
Upstream Filter(I)				1.00	0.00	0.00	1.00	0.00	0.00	0.00	0.00	1.00
Uniform Delay (d), s/veh				8.4	0.0	0.0	17.8	0.0	0.0	0.0	0.0	15.5
Incr Delay (d2), s/veh				6.4	0.0	0.0	0.8	0.0	0.0	0.0	0.0	0.0
Initial Q Delay(d3), s/veh				0.0	0.0	0.0	0.0	0.0	0.0	0.0	0.0	0.0
%ile BackOfQ(50%),veh/ln				5.4	0.0	0.0	1.6	0.0	0.0	0.0	0.0	0.0
Unsig. Movement Delay, s/veh												
LnGrp Delay(d), s/veh				14.8	0.0	0.0	18.6	0.0	0.0	0.0	0.0	15.5
LnGrp LOS				B			B					B
Approach Vol, veh/h					818			180			6	
Approach Delay, s/veh					14.8			18.6			15.5	
Approach LOS					B			B			B	

Timer - Assigned Phs	4	6	8
Phs Duration (G+Y+Rc), s	13.0	31.6	13.0
Change Period (Y+Rc), s	5.5	5.9	5.5
Max Green Setting (Gmax), s	24.5	34.1	24.5
Max Q Clear Time (g_c+I1), s	2.1	19.4	7.5
Green Ext Time (p_c), s	0.0	6.3	0.8

Intersection Summary	
HCM 7th Control Delay, s/veh	15.5
HCM 7th LOS	B

Notes

User approved pedestrian interval to be less than phase max green.

Intersection	
Int Delay, s/veh	0.1

Movement	EBT	EBR	WBL	WBT	NBL	NBR
Lane Configurations						
Traffic Vol, veh/h	20	35	0	30	1	0
Future Vol, veh/h	20	35	0	30	1	0
Conflicting Peds, #/hr	0	8	5	0	8	5
Sign Control	Free	Free	Free	Free	Stop	Stop
RT Channelized	-	None	-	None	-	None
Storage Length	-	-	0	-	0	-
Veh in Median Storage, #	0	-	-	0	0	-
Grade, %	0	-	-	0	0	-
Peak Hour Factor	88	88	88	88	88	88
Heavy Vehicles, %	3	3	3	3	0	0
Mvmt Flow	23	40	0	34	1	0

Major/Minor	Major1		Major2		Minor1	
Conflicting Flow All	0	0	71	0	93	56
Stage 1	-	-	-	-	51	-
Stage 2	-	-	-	-	42	-
Critical Hdwy	-	-	4.13	-	6.4	6.2
Critical Hdwy Stg 1	-	-	-	-	5.4	-
Critical Hdwy Stg 2	-	-	-	-	5.4	-
Follow-up Hdwy	-	-	2.227	-	3.5	3.3
Pot Cap-1 Maneuver	-	-	1524	-	912	1017
Stage 1	-	-	-	-	977	-
Stage 2	-	-	-	-	986	-
Platoon blocked, %	-	-		-		
Mov Cap-1 Maneuver	-	-	1512	-	898	1004
Mov Cap-2 Maneuver	-	-	-	-	898	-
Stage 1	-	-	-	-	970	-
Stage 2	-	-	-	-	978	-

Approach	EB	WB	NB
HCM Control Delay, s/v	0	0	9.01
HCM LOS			A

Minor Lane/Major Mvmt	NBLn1	EBT	EBR	WBL	WBT
Capacity (veh/h)	898	-	-	1512	-
HCM Lane V/C Ratio	0.001	-	-	-	-
HCM Control Delay (s/veh)	9	-	-	0	-
HCM Lane LOS	A	-	-	A	-
HCM 95th %tile Q(veh)	0	-	-	0	-

Intersection	
Int Delay, s/veh	1.2

Movement	EBL	EBT	EBR	WBL	WBT	WBR	NBL	NBT	NBR	SBL	SBT	SBR
Lane Configurations												
Traffic Vol, veh/h	35	0	1	0	0	1	2	180	0	0	130	35
Future Vol, veh/h	35	0	1	0	0	1	2	180	0	0	130	35
Conflicting Peds, #/hr	1	0	1	1	0	1	1	0	1	1	0	1
Sign Control	Stop	Stop	Stop	Stop	Stop	Stop	Free	Free	Free	Free	Free	Free
RT Channelized	-	-	None	-	-	None	-	-	None	-	-	None
Storage Length	-	-	-	-	-	-	-	-	-	-	-	-
Veh in Median Storage, #	-	0	-	-	0	-	-	0	-	-	0	-
Grade, %	-	0	-	-	0	-	-	0	-	-	0	-
Peak Hour Factor	88	88	88	88	88	88	88	88	88	88	88	88
Heavy Vehicles, %	0	0	0	0	0	0	0	0	0	0	0	0
Mvmt Flow	40	0	1	0	0	1	2	205	0	0	148	40

Major/Minor	Minor2			Minor1			Major1			Major2		
Conflicting Flow All	379	379	170	359	399	207	189	0	0	206	0	0
Stage 1	169	169	-	210	210	-	-	-	-	-	-	-
Stage 2	210	210	-	149	189	-	-	-	-	-	-	-
Critical Hdwy	7.1	6.5	6.2	7.1	6.5	6.2	4.1	-	-	4.1	-	-
Critical Hdwy Stg 1	6.1	5.5	-	6.1	5.5	-	-	-	-	-	-	-
Critical Hdwy Stg 2	6.1	5.5	-	6.1	5.5	-	-	-	-	-	-	-
Follow-up Hdwy	3.5	4	3.3	3.5	4	3.3	2.2	-	-	2.2	-	-
Pot Cap-1 Maneuver	583	556	880	600	542	839	1398	-	-	1378	-	-
Stage 1	838	763	-	797	732	-	-	-	-	-	-	-
Stage 2	797	732	-	859	748	-	-	-	-	-	-	-
Platoon blocked, %								-	-		-	-
Mov Cap-1 Maneuver	580	554	878	597	540	837	1396	-	-	1377	-	-
Mov Cap-2 Maneuver	580	554	-	597	540	-	-	-	-	-	-	-
Stage 1	837	762	-	794	730	-	-	-	-	-	-	-
Stage 2	793	730	-	857	747	-	-	-	-	-	-	-

Approach	EB	WB	NB	SB
HCM Control Delay, s/v	11.61	9.3	0.08	0
HCM LOS	B	A		

Minor Lane/Major Mvmt	NBL	NBT	NBR	EBLn1	WBLn1	SBL	SBT	SBR
Capacity (veh/h)	20	-	-	585	837	1377	-	-
HCM Lane V/C Ratio	0.002	-	-	0.07	0.001	-	-	-
HCM Control Delay (s/veh)	7.6	0	-	11.6	9.3	0	-	-
HCM Lane LOS	A	A	-	B	A	A	-	-
HCM 95th %tile Q(veh)	0	-	-	0.2	0	0	-	-

Intersection	
Int Delay, s/veh	1.2

Movement	WBL	WBR	NBT	NBR	SBL	SBT
Lane Configurations						
Traffic Vol, veh/h	4	60	410	10	35	340
Future Vol, veh/h	4	60	410	10	35	340
Conflicting Peds, #/hr	1	1	0	1	1	0
Sign Control	Stop	Stop	Free	Free	Free	Free
RT Channelized	-	None	-	None	-	None
Storage Length	0	-	-	-	-	-
Veh in Median Storage, #	0	-	0	-	-	0
Grade, %	0	-	0	-	-	0
Peak Hour Factor	93	93	93	93	93	93
Heavy Vehicles, %	3	3	0	0	0	0
Mvmt Flow	4	65	441	11	38	366

Major/Minor	Minor1		Major1		Major2	
Conflicting Flow All	889	448	0	0	453	0
Stage 1	447	-	-	-	-	-
Stage 2	442	-	-	-	-	-
Critical Hdwy	6.43	6.23	-	-	4.1	-
Critical Hdwy Stg 1	5.43	-	-	-	-	-
Critical Hdwy Stg 2	5.43	-	-	-	-	-
Follow-up Hdwy	3.527	3.327	-	-	2.2	-
Pot Cap-1 Maneuver	312	608	-	-	1119	-
Stage 1	642	-	-	-	-	-
Stage 2	646	-	-	-	-	-
Platoon blocked, %			-	-		-
Mov Cap-1 Maneuver	299	607	-	-	1118	-
Mov Cap-2 Maneuver	299	-	-	-	-	-
Stage 1	641	-	-	-	-	-
Stage 2	618	-	-	-	-	-

Approach	WB	NB	SB
HCM Control Delay, s/v	12.17	0	0.78
HCM LOS	B		

Minor Lane/Major Mvmt	NBT	NBR	WBLn1	SBL	SBT
Capacity (veh/h)	-	-	570	168	-
HCM Lane V/C Ratio	-	-	0.121	0.034	-
HCM Control Delay (s/veh)	-	-	12.2	8.3	0
HCM Lane LOS	-	-	B	A	A
HCM 95th %tile Q(veh)	-	-	0.4	0.1	-

Movement	EBL	EBT	EBR	WBL	WBT	WBR	NBL	NBT	NBR	SBL	SBT	SBR
Lane Configurations												
Traffic Volume (vph)	75	370	65	0	0	0	45	145	280	25	305	405
Future Volume (vph)	75	370	65	0	0	0	45	145	280	25	305	405
Ideal Flow (vphpl)	1900	1900	1900	1900	1900	1900	1900	1900	1900	1900	1900	1900
Total Lost time (s)		8.5	8.5				5.5	5.5		5.9	5.5	5.5
Lane Util. Factor		1.00	1.00				1.00	1.00		1.00	1.00	1.00
Frpb, ped/bikes		1.00	0.97				1.00	0.97		1.00	1.00	1.00
Flpb, ped/bikes		1.00	1.00				0.99	1.00		1.00	1.00	1.00
Frt		1.00	0.85				1.00	0.90		1.00	1.00	0.85
Flt Protected		0.99	1.00				0.95	1.00		0.95	1.00	1.00
Satd. Flow (prot)		1884	1573				1798	1672		1805	1900	1615
Flt Permitted		0.99	1.00				0.56	1.00		0.22	1.00	1.00
Satd. Flow (perm)		1884	1573				1068	1672		432	1900	1615
Peak-hour factor, PHF	0.94	0.94	0.94	0.94	0.94	0.94	0.94	0.94	0.94	0.94	0.94	0.94
Adj. Flow (vph)	80	394	69	0	0	0	48	154	298	27	324	431
RTOR Reduction (vph)	0	0	45	0	0	0	0	60	0	0	0	218
Lane Group Flow (vph)	0	474	24	0	0	0	48	392	0	27	324	213
Confl. Peds. (#/hr)			3	6		3	3		6	3		
Heavy Vehicles (%)	0%	0%	0%	0%	0%	0%	0%	0%	0%	0%	0%	0%
Turn Type	Perm	NA	Perm				Perm	NA		pm+pt	NA	Perm
Protected Phases		4						2		1	6	
Permitted Phases	4		4				2			6		6
Actuated Green, G (s)		33.8	33.8				30.4	30.4		43.6	43.6	43.6
Effective Green, g (s)		30.8	30.8				30.4	30.4		43.6	43.6	43.6
Actuated g/C Ratio		0.35	0.35				0.34	0.34		0.49	0.49	0.49
Clearance Time (s)		5.5	5.5				5.5	5.5		5.9	5.5	5.5
Vehicle Extension (s)		6.0	6.0				3.0	3.0		3.0	3.0	3.0
Lane Grp Cap (vph)		656	548				367	574		326	937	796
v/s Ratio Prot								c0.23		0.01	c0.17	
v/s Ratio Perm		0.25	0.02				0.04			0.03		0.13
v/c Ratio		0.72	0.04				0.13	0.68		0.08	0.34	0.26
Uniform Delay, d1		25.0	19.0				19.9	24.8		13.8	13.6	13.0
Progression Factor		1.00	1.00				1.00	1.00		0.95	0.93	0.78
Incremental Delay, d2		5.5	0.0				0.1	3.3		0.1	0.2	0.1
Delay (s)		30.5	19.1				20.0	28.2		13.3	13.0	10.4
Level of Service		C	B				C	C		B	B	B
Approach Delay (s/veh)		29.1			0.0			27.4			11.6	
Approach LOS		C			A			C			B	

Intersection Summary			
HCM 2000 Control Delay (s/veh)	21.2	HCM 2000 Level of Service	C
HCM 2000 Volume to Capacity ratio	0.68		
Actuated Cycle Length (s)	88.4	Sum of lost time (s)	19.9
Intersection Capacity Utilization	76.3%	ICU Level of Service	D
Analysis Period (min)	15		

c Critical Lane Group

Movement	EBL	EBR	NBL	NBT	SBT	SBR
Lane Configurations						
Traffic Volume (vph)	1	155	0	225	580	0
Future Volume (vph)	1	155	0	225	580	0
Ideal Flow (vphpl)	1900	1900	1900	1900	1900	1900
Total Lost time (s)	5.9	5.9		5.5	5.5	
Lane Util. Factor	1.00	1.00		1.00	0.95	
Frt	1.00	0.85		1.00	1.00	
Flt Protected	0.95	1.00		1.00	1.00	
Satd. Flow (prot)	1805	1615		1900	3610	
Flt Permitted	0.95	1.00		1.00	1.00	
Satd. Flow (perm)	1805	1615		1900	3610	
Peak-hour factor, PHF	0.93	0.93	0.93	0.93	0.93	0.93
Adj. Flow (vph)	1	167	0	242	624	0
RTOR Reduction (vph)	0	153	0	0	0	0
Lane Group Flow (vph)	1	14	0	242	624	0
Heavy Vehicles (%)	0%	0%	0%	0%	0%	0%
Turn Type	Prot	Perm		NA	NA	
Protected Phases	1			2 4	2 4	
Permitted Phases		1				
Actuated Green, G (s)	7.3	7.3		69.7	69.7	
Effective Green, g (s)	7.3	7.3		69.7	69.7	
Actuated g/C Ratio	0.08	0.08		0.79	0.79	
Clearance Time (s)	5.9	5.9				
Vehicle Extension (s)	3.0	3.0				
Lane Grp Cap (vph)	149	133		1498	2846	
v/s Ratio Prot	0.00			0.13	c0.17	
v/s Ratio Perm		c0.01				
v/c Ratio	0.00	0.10		0.16	0.21	
Uniform Delay, d1	37.2	37.5		2.2	2.3	
Progression Factor	1.00	1.00		0.15	1.00	
Incremental Delay, d2	0.0	0.3		0.0	0.0	
Delay (s)	37.2	37.8		0.3	2.4	
Level of Service	D	D		A	A	
Approach Delay (s/veh)	37.8			0.3	2.4	
Approach LOS	D			A	A	

Intersection Summary			
HCM 2000 Control Delay (s/veh)	7.7	HCM 2000 Level of Service	A
HCM 2000 Volume to Capacity ratio	0.22		
Actuated Cycle Length (s)	88.4	Sum of lost time (s)	16.9
Intersection Capacity Utilization	35.1%	ICU Level of Service	A
Analysis Period (min)	15		
c Critical Lane Group			

Movement	EBL	EBT	EBR	WBL	WBT	WBR	NBL	NBT	NBR	SBL	SBT	SBR
Lane Configurations												
Traffic Volume (veh/h)	0	0	0	575	5	4	215	5	0	0	5	3
Future Volume (veh/h)	0	0	0	575	5	4	215	5	0	0	5	3
Initial Q (Qb), veh				0	0	0	0	0	0	0	0	0
Lane Width Adj.				1.00	1.00	1.00	1.00	1.00	1.00	1.00	1.00	1.00
Ped-Bike Adj(A_pbT)				1.00		1.00	1.00		1.00	1.00		1.00
Parking Bus, Adj				1.00	1.00	1.00	1.00	1.00	1.00	1.00	1.00	1.00
Work Zone On Approach					No			No			No	
Adj Sat Flow, veh/h/ln				1900	1900	1900	1900	1900	0	0	1900	1900
Adj Flow Rate, veh/h				618	5	4	231	5	0	0	5	3
Peak Hour Factor				0.93	0.93	0.93	0.93	0.93	0.93	0.93	0.93	0.93
Percent Heavy Veh, %				0	0	0	0	0	0	0	0	0
Cap, veh/h				731	6	5	491	7	0	0	250	150
Arrive On Green				0.49	0.41	0.49	0.23	0.23	0.00	0.00	0.23	0.23
Sat Flow, veh/h				1783	14	12	1379	30	0	0	1110	666
Grp Volume(v), veh/h				627	0	0	236	0	0	0	0	8
Grp Sat Flow(s),veh/h/ln				1809	0	0	1409	0	0	0	0	1777
Q Serve(g_s), s				11.9	0.0	0.0	6.1	0.0	0.0	0.0	0.0	0.1
Cycle Q Clear(g_c), s				11.9	0.0	0.0	6.2	0.0	0.0	0.0	0.0	0.1
Prop In Lane				0.99		0.01	0.98		0.00	0.00		0.37
Lane Grp Cap(c), veh/h				742	0	0	498	0	0	0	0	400
V/C Ratio(X)				0.85	0.00	0.00	0.47	0.00	0.00	0.00	0.00	0.02
Avail Cap(c_a), veh/h				1425	0	0	1063	0	0	0	0	1102
HCM Platoon Ratio				1.00	1.00	1.00	1.00	1.00	1.00	1.00	1.00	1.00
Upstream Filter(I)				1.00	0.00	0.00	1.00	0.00	0.00	0.00	0.00	1.00
Uniform Delay (d), s/veh				9.1	0.0	0.0	14.3	0.0	0.0	0.0	0.0	11.9
Incr Delay (d2), s/veh				3.3	0.0	0.0	0.7	0.0	0.0	0.0	0.0	0.0
Initial Q Delay(d3), s/veh				0.0	0.0	0.0	0.0	0.0	0.0	0.0	0.0	0.0
%ile BackOfQ(50%),veh/ln				3.5	0.0	0.0	1.7	0.0	0.0	0.0	0.0	0.0
Unsig. Movement Delay, s/veh												
LnGrp Delay(d), s/veh				12.4	0.0	0.0	15.0	0.0	0.0	0.0	0.0	11.9
LnGrp LOS				B			B					B
Approach Vol, veh/h					627			236			8	
Approach Delay, s/veh					12.4			15.0			11.9	
Approach LOS					B			B			B	

Timer - Assigned Phs	4	6	8
Phs Duration (G+Y+Rc), s	14.4	25.1	14.4
Change Period (Y+Rc), s	5.5	5.9	5.5
Max Green Setting (Gmax), s	24.5	34.1	24.5
Max Q Clear Time (g_c+I1), s	2.1	13.9	8.2
Green Ext Time (p_c), s	0.0	5.2	1.2

Intersection Summary	
HCM 7th Control Delay, s/veh	13.1
HCM 7th LOS	B

Notes

User approved pedestrian interval to be less than phase max green.

Intersection	
Int Delay, s/veh	2.6

Movement	EBT	EBR	WBL	WBT	NBL	NBR
Lane Configurations						
Traffic Vol, veh/h	15	25	1	25	25	1
Future Vol, veh/h	15	25	1	25	25	1
Conflicting Peds, #/hr	0	0	0	0	0	0
Sign Control	Free	Free	Free	Free	Stop	Stop
RT Channelized	-	None	-	None	-	None
Storage Length	-	-	0	-	0	-
Veh in Median Storage, #	0	-	-	0	0	-
Grade, %	0	-	-	0	0	-
Peak Hour Factor	84	84	84	84	84	84
Heavy Vehicles, %	2	2	7	7	0	0
Mvmt Flow	18	30	1	30	30	1

Major/Minor	Major1		Major2		Minor1	
Conflicting Flow All	0	0	48	0	65	33
Stage 1	-	-	-	-	33	-
Stage 2	-	-	-	-	32	-
Critical Hdwy	-	-	4.17	-	6.4	6.2
Critical Hdwy Stg 1	-	-	-	-	5.4	-
Critical Hdwy Stg 2	-	-	-	-	5.4	-
Follow-up Hdwy	-	-	2.263	-	3.5	3.3
Pot Cap-1 Maneuver	-	-	1528	-	946	1047
Stage 1	-	-	-	-	995	-
Stage 2	-	-	-	-	996	-
Platoon blocked, %	-	-		-		
Mov Cap-1 Maneuver	-	-	1528	-	945	1047
Mov Cap-2 Maneuver	-	-	-	-	945	-
Stage 1	-	-	-	-	995	-
Stage 2	-	-	-	-	995	-

Approach	EB	WB	NB
HCM Control Delay, s/v	0	0.28	8.92
HCM LOS			A

Minor Lane/Major Mvmt	NBLn1	EBT	EBR	WBL	WBT
Capacity (veh/h)	949	-	-	69	-
HCM Lane V/C Ratio	0.033	-	-	0.001	-
HCM Control Delay (s/veh)	8.9	-	-	7.4	0
HCM Lane LOS	A	-	-	A	A
HCM 95th %tile Q(veh)	0.1	-	-	0	-

Intersection	
Int Delay, s/veh	1.1

Movement	EBL	EBT	EBR	WBL	WBT	WBR	NBL	NBT	NBR	SBL	SBT	SBR
Lane Configurations												
Traffic Vol, veh/h	35	0	2	0	1	2	0	150	1	0	180	40
Future Vol, veh/h	35	0	2	0	1	2	0	150	1	0	180	40
Conflicting Peds, #/hr	1	0	1	0	0	0	1	0	0	0	0	1
Sign Control	Stop	Stop	Stop	Stop	Stop	Stop	Free	Free	Free	Free	Free	Free
RT Channelized	-	-	None	-	-	None	-	-	None	-	-	None
Storage Length	-	-	-	-	-	-	-	-	-	-	-	-
Veh in Median Storage, #	-	0	-	-	0	-	-	0	-	-	0	-
Grade, %	-	0	-	-	0	-	-	0	-	-	0	-
Peak Hour Factor	90	90	90	90	90	90	90	90	90	90	90	90
Heavy Vehicles, %	0	0	0	0	0	0	0	0	0	0	0	0
Mvmt Flow	39	0	2	0	1	2	0	167	1	0	200	44

Major/Minor	Minor2			Minor1			Major1			Major2		
Conflicting Flow All	391	391	224	368	413	168	245	0	0	168	0	0
Stage 1	223	223	-	167	167	-	-	-	-	-	-	-
Stage 2	168	168	-	201	245	-	-	-	-	-	-	-
Critical Hdwy	7.1	6.5	6.2	7.1	6.5	6.2	4.1	-	-	4.1	-	-
Critical Hdwy Stg 1	6.1	5.5	-	6.1	5.5	-	-	-	-	-	-	-
Critical Hdwy Stg 2	6.1	5.5	-	6.1	5.5	-	-	-	-	-	-	-
Follow-up Hdwy	3.5	4	3.3	3.5	4	3.3	2.2	-	-	2.2	-	-
Pot Cap-1 Maneuver	571	548	820	592	533	881	1332	-	-	1422	-	-
Stage 1	784	723	-	839	764	-	-	-	-	-	-	-
Stage 2	838	763	-	805	707	-	-	-	-	-	-	-
Platoon blocked, %								-	-		-	-
Mov Cap-1 Maneuver	568	547	819	590	532	880	1331	-	-	1422	-	-
Mov Cap-2 Maneuver	568	547	-	590	532	-	-	-	-	-	-	-
Stage 1	783	722	-	839	764	-	-	-	-	-	-	-
Stage 2	834	763	-	803	706	-	-	-	-	-	-	-

Approach	EB	WB	NB	SB
HCM Control Delay, s/v	11.71	10	0	0
HCM LOS	B	B		

Minor Lane/Major Mvmt	NBL	NBT	NBR	EBLn1	WBLn1	SBL	SBT	SBR
Capacity (veh/h)	1331	-	-	577	723	1422	-	-
HCM Lane V/C Ratio	-	-	-	0.071	0.005	-	-	-
HCM Control Delay (s/veh)	0	-	-	11.7	10	0	-	-
HCM Lane LOS	A	-	-	B	B	A	-	-
HCM 95th %tile Q(veh)	0	-	-	0.2	0	0	-	-

Intersection	
Int Delay, s/veh	1.5

Movement	WBL	WBR	NBT	NBR	SBL	SBT
Lane Configurations						
Traffic Vol, veh/h	10	70	355	10	30	370
Future Vol, veh/h	10	70	355	10	30	370
Conflicting Peds, #/hr	3	3	0	3	3	0
Sign Control	Stop	Stop	Free	Free	Free	Free
RT Channelized	-	None	-	None	-	None
Storage Length	0	-	-	-	-	-
Veh in Median Storage, #	0	-	0	-	-	0
Grade, %	0	-	0	-	-	0
Peak Hour Factor	85	85	85	85	85	85
Heavy Vehicles, %	0	0	0	0	0	0
Mvmt Flow	12	82	418	12	35	435

Major/Minor	Minor1		Major1		Major2	
Conflicting Flow All	935	430	0	0	432	0
Stage 1	427	-	-	-	-	-
Stage 2	509	-	-	-	-	-
Critical Hdwy	6.4	6.2	-	-	4.1	-
Critical Hdwy Stg 1	5.4	-	-	-	-	-
Critical Hdwy Stg 2	5.4	-	-	-	-	-
Follow-up Hdwy	3.5	3.3	-	-	2.2	-
Pot Cap-1 Maneuver	297	630	-	-	1138	-
Stage 1	663	-	-	-	-	-
Stage 2	608	-	-	-	-	-
Platoon blocked, %			-	-		-
Mov Cap-1 Maneuver	283	626	-	-	1135	-
Mov Cap-2 Maneuver	283	-	-	-	-	-
Stage 1	661	-	-	-	-	-
Stage 2	581	-	-	-	-	-

Approach	WB	NB	SB
HCM Control Delay, s/v	13	0	0.62
HCM LOS	B		

Minor Lane/Major Mvmt	NBT	NBR	WBLn1	SBL	SBT
Capacity (veh/h)	-	-	544	135	-
HCM Lane V/C Ratio	-	-	0.173	0.031	-
HCM Control Delay (s/veh)	-	-	13	8.3	0
HCM Lane LOS	-	-	B	A	A
HCM 95th %tile Q(veh)	-	-	0.6	0.1	-

Movement	EBL	EBT	EBR	WBL	WBT	WBR	NBL	NBT	NBR	SBL	SBT	SBR
Lane Configurations												
Traffic Volume (vph)	50	335	90	0	0	0	85	145	210	20	295	525
Future Volume (vph)	50	335	90	0	0	0	85	145	210	20	295	525
Ideal Flow (vphpl)	1900	1900	1900	1900	1900	1900	1900	1900	1900	1900	1900	1900
Total Lost time (s)		8.5	8.5				5.5	5.5		5.9	5.5	5.5
Lane Util. Factor		1.00	1.00				1.00	1.00		1.00	1.00	1.00
Frpb, ped/bikes		1.00	0.97				1.00	0.98		1.00	1.00	1.00
Flpb, ped/bikes		1.00	1.00				0.99	1.00		0.99	1.00	1.00
Frt		1.00	0.85				1.00	0.91		1.00	1.00	0.85
Flt Protected		0.99	1.00				0.95	1.00		0.95	1.00	1.00
Satd. Flow (prot)		1888	1576				1800	1698		1804	1900	1615
Flt Permitted		0.99	1.00				0.56	1.00		0.29	1.00	1.00
Satd. Flow (perm)		1888	1576				1077	1698		556	1900	1615
Peak-hour factor, PHF	0.93	0.93	0.93	0.93	0.93	0.93	0.93	0.93	0.93	0.93	0.93	0.93
Adj. Flow (vph)	54	360	97	0	0	0	91	156	226	22	317	565
RTOR Reduction (vph)	0	0	52	0	0	0	0	46	0	0	0	288
Lane Group Flow (vph)	0	414	45	0	0	0	91	336	0	22	317	277
Confl. Peds. (#/hr)			2	5		3	2		5	3		
Heavy Vehicles (%)	0%	0%	0%	0%	0%	0%	0%	0%	0%	0%	0%	0%
Turn Type	Perm	NA	Perm				Perm	NA		pm+pt	NA	Perm
Protected Phases		4						2		1	6	
Permitted Phases	4		4				2			6		6
Actuated Green, G (s)		33.0	33.0				29.0	29.0		42.2	42.2	42.2
Effective Green, g (s)		30.0	30.0				29.0	29.0		42.2	42.2	42.2
Actuated g/C Ratio		0.35	0.35				0.34	0.34		0.49	0.49	0.49
Clearance Time (s)		5.5	5.5				5.5	5.5		5.9	5.5	5.5
Vehicle Extension (s)		6.0	6.0				3.0	3.0		3.0	3.0	3.0
Lane Grp Cap (vph)		657	548				362	571		377	930	790
v/s Ratio Prot								c0.20		0.00	0.17	
v/s Ratio Perm		0.22	0.03				0.08			0.02		c0.17
v/c Ratio		0.63	0.08				0.25	0.58		0.05	0.34	0.35
Uniform Delay, d1		23.4	18.8				20.7	23.6		12.8	13.4	13.5
Progression Factor		1.00	1.00				1.00	1.00		0.97	0.93	0.95
Incremental Delay, d2		3.2	0.1				0.3	1.5		0.0	0.2	0.2
Delay (s)		26.7	19.0				21.0	25.2		12.5	12.8	13.2
Level of Service		C	B				C	C		B	B	B
Approach Delay (s/veh)		25.2			0.0			24.4			13.0	
Approach LOS		C			A			C			B	

Intersection Summary			
HCM 2000 Control Delay (s/veh)	19.2	HCM 2000 Level of Service	B
HCM 2000 Volume to Capacity ratio	0.60		
Actuated Cycle Length (s)	86.2	Sum of lost time (s)	19.9
Intersection Capacity Utilization	68.6%	ICU Level of Service	C
Analysis Period (min)	15		

c Critical Lane Group

Movement	EBL	EBR	NBL	NBT	SBT	SBR
Lane Configurations						
Traffic Volume (vph)	1	165	0	200	695	0
Future Volume (vph)	1	165	0	200	695	0
Ideal Flow (vphpl)	1900	1900	1900	1900	1900	1900
Total Lost time (s)	5.9	5.9		5.5	5.5	
Lane Util. Factor	1.00	1.00		1.00	0.95	
Frt	1.00	0.85		1.00	1.00	
Flt Protected	0.95	1.00		1.00	1.00	
Satd. Flow (prot)	1805	1615		1900	3610	
Flt Permitted	0.95	1.00		1.00	1.00	
Satd. Flow (perm)	1805	1615		1900	3610	
Peak-hour factor, PHF	0.95	0.95	0.95	0.95	0.95	0.95
Adj. Flow (vph)	1	174	0	211	732	0
RTOR Reduction (vph)	0	159	0	0	0	0
Lane Group Flow (vph)	1	15	0	211	732	0
Heavy Vehicles (%)	0%	0%	0%	0%	0%	0%
Turn Type	Prot	Perm		NA	NA	
Protected Phases	1			2 4	2 4	
Permitted Phases		1				
Actuated Green, G (s)	7.3	7.3		67.5	67.5	
Effective Green, g (s)	7.3	7.3		67.5	67.5	
Actuated g/C Ratio	0.08	0.08		0.78	0.78	
Clearance Time (s)	5.9	5.9				
Vehicle Extension (s)	3.0	3.0				
Lane Grp Cap (vph)	152	136		1487	2826	
v/s Ratio Prot	0.00			0.11	c0.20	
v/s Ratio Perm		c0.01				
v/c Ratio	0.00	0.10		0.14	0.25	
Uniform Delay, d1	36.1	36.4		2.2	2.5	
Progression Factor	1.00	1.00		0.12	1.00	
Incremental Delay, d2	0.0	0.3		0.0	0.0	
Delay (s)	36.1	36.7		0.3	2.5	
Level of Service	D	D		A	A	
Approach Delay (s/veh)	36.7			0.3	2.5	
Approach LOS	D			A	A	

Intersection Summary			
HCM 2000 Control Delay (s/veh)	7.5	HCM 2000 Level of Service	A
HCM 2000 Volume to Capacity ratio	0.26		
Actuated Cycle Length (s)	86.2	Sum of lost time (s)	16.9
Intersection Capacity Utilization	38.9%	ICU Level of Service	A
Analysis Period (min)	15		
c Critical Lane Group			

Movement	EBL	EBT	EBR	WBL	WBT	WBR	NBL	NBT	NBR	SBL	SBT	SBR
Lane Configurations												
Traffic Volume (veh/h)	0	0	0	690	5	1	200	3	0	0	3	3
Future Volume (veh/h)	0	0	0	690	5	1	200	3	0	0	3	3
Initial Q (Qb), veh				0	0	0	0	0	0	0	0	0
Lane Width Adj.				1.00	1.00	1.00	1.00	1.00	1.00	1.00	1.00	1.00
Ped-Bike Adj(A_pbT)				1.00		1.00	1.00		1.00	1.00		1.00
Parking Bus, Adj				1.00	1.00	1.00	1.00	1.00	1.00	1.00	1.00	1.00
Work Zone On Approach					No			No			No	
Adj Sat Flow, veh/h/ln				1900	1900	1900	1900	1900	0	0	1900	1900
Adj Flow Rate, veh/h				697	5	1	202	3	0	0	3	3
Peak Hour Factor				0.99	0.99	0.99	0.99	0.99	0.99	0.99	0.99	0.99
Percent Heavy Veh, %				0	0	0	0	0	0	0	0	0
Cap, veh/h				815	6	1	443	4	0	0	167	167
Arrive On Green				0.53	0.45	0.53	0.19	0.19	0.00	0.00	0.19	0.19
Sat Flow, veh/h				1794	13	3	1396	21	0	0	872	872
Grp Volume(v), veh/h				703	0	0	205	0	0	0	0	6
Grp Sat Flow(s),veh/h/ln				1810	0	0	1416	0	0	0	0	1743
Q Serve(g_s), s				13.6	0.0	0.0	5.5	0.0	0.0	0.0	0.0	0.1
Cycle Q Clear(g_c), s				13.6	0.0	0.0	5.6	0.0	0.0	0.0	0.0	0.1
Prop In Lane				0.99		0.00	0.99		0.00	0.00		0.50
Lane Grp Cap(c), veh/h				822	0	0	447	0	0	0	0	334
V/C Ratio(X)				0.86	0.00	0.00	0.46	0.00	0.00	0.00	0.00	0.02
Avail Cap(c_a), veh/h				1385	0	0	1039	0	0	0	0	1051
HCM Platoon Ratio				1.00	1.00	1.00	1.00	1.00	1.00	1.00	1.00	1.00
Upstream Filter(I)				1.00	0.00	0.00	1.00	0.00	0.00	0.00	0.00	1.00
Uniform Delay (d), s/veh				8.5	0.0	0.0	15.6	0.0	0.0	0.0	0.0	13.3
Incr Delay (d2), s/veh				3.4	0.0	0.0	0.7	0.0	0.0	0.0	0.0	0.0
Initial Q Delay(d3), s/veh				0.0	0.0	0.0	0.0	0.0	0.0	0.0	0.0	0.0
%ile BackOfQ(50%),veh/ln				3.8	0.0	0.0	1.6	0.0	0.0	0.0	0.0	0.0
Unsig. Movement Delay, s/veh												
LnGrp Delay(d), s/veh				11.8	0.0	0.0	16.3	0.0	0.0	0.0	0.0	13.3
LnGrp LOS				B			B					B
Approach Vol, veh/h					703			205			6	
Approach Delay, s/veh					11.8			16.3			13.3	
Approach LOS					B			B			B	

Timer - Assigned Phs	4	6	8
Phs Duration (G+Y+Rc), s	13.3	27.3	13.3
Change Period (Y+Rc), s	5.5	5.9	5.5
Max Green Setting (Gmax), s	24.5	34.1	24.5
Max Q Clear Time (g_c+I1), s	2.1	15.6	7.6
Green Ext Time (p_c), s	0.0	5.9	1.0

Intersection Summary	
HCM 7th Control Delay, s/veh	12.8
HCM 7th LOS	B

Notes

User approved pedestrian interval to be less than phase max green.

Intersection	
Int Delay, s/veh	5.3

Movement	EBT	EBR	WBL	WBT	NBL	NBR
Lane Configurations						
Traffic Vol, veh/h	2	40	0	10	65	0
Future Vol, veh/h	2	40	0	10	65	0
Conflicting Peds, #/hr	0	6	3	0	6	3
Sign Control	Free	Free	Free	Free	Stop	Stop
RT Channelized	-	None	-	None	-	None
Storage Length	-	-	0	-	0	-
Veh in Median Storage, #	0	-	-	0	0	-
Grade, %	0	-	-	0	0	-
Peak Hour Factor	47	47	47	47	47	47
Heavy Vehicles, %	0	0	0	0	0	0
Mvmt Flow	4	85	0	21	138	0

Major/Minor	Major1		Major2		Minor1	
Conflicting Flow All	0	0	95	0	80	56
Stage 1	-	-	-	-	53	-
Stage 2	-	-	-	-	27	-
Critical Hdwy	-	-	4.1	-	6.4	6.2
Critical Hdwy Stg 1	-	-	-	-	5.4	-
Critical Hdwy Stg 2	-	-	-	-	5.4	-
Follow-up Hdwy	-	-	2.2	-	3.5	3.3
Pot Cap-1 Maneuver	-	-	1511	-	927	1017
Stage 1	-	-	-	-	975	-
Stage 2	-	-	-	-	1000	-
Platoon blocked, %	-	-		-		
Mov Cap-1 Maneuver	-	-	1503	-	917	1008
Mov Cap-2 Maneuver	-	-	-	-	917	-
Stage 1	-	-	-	-	969	-
Stage 2	-	-	-	-	995	-

Approach	EB	WB	NB
HCM Control Delay, s/v	0	0	9.62
HCM LOS			A

Minor Lane/Major Mvmt	NBLn1	EBT	EBR	WBL	WBT
Capacity (veh/h)	917	-	-	1503	-
HCM Lane V/C Ratio	0.151	-	-	-	-
HCM Control Delay (s/veh)	9.6	-	-	0	-
HCM Lane LOS	A	-	-	A	-
HCM 95th %tile Q(veh)	0.5	-	-	0	-

Intersection	
Int Delay, s/veh	1

Movement	EBL	EBT	EBR	WBL	WBT	WBR	NBL	NBT	NBR	SBL	SBT	SBR
Lane Configurations												
Traffic Vol, veh/h	25	0	3	0	0	2	2	180	0	1	120	25
Future Vol, veh/h	25	0	3	0	0	2	2	180	0	1	120	25
Conflicting Peds, #/hr	2	0	2	0	0	0	2	0	0	0	0	2
Sign Control	Stop	Stop	Stop	Stop	Stop	Stop	Free	Free	Free	Free	Free	Free
RT Channelized	-	-	None	-	-	None	-	-	None	-	-	None
Storage Length	-	-	-	-	-	-	-	-	-	-	-	-
Veh in Median Storage, #	-	0	-	-	0	-	-	0	-	-	0	-
Grade, %	-	0	-	-	0	-	-	0	-	-	0	-
Peak Hour Factor	95	95	95	95	95	95	95	95	95	95	95	95
Heavy Vehicles, %	0	0	0	0	0	0	0	0	0	0	0	0
Mvmt Flow	26	0	3	0	0	2	2	189	0	1	126	26

Major/Minor	Minor2			Minor1			Major1			Major2		
Conflicting Flow All	339	337	143	324	350	191	155	0	0	189	0	0
Stage 1	144	144	-	194	194	-	-	-	-	-	-	-
Stage 2	196	194	-	130	157	-	-	-	-	-	-	-
Critical Hdwy	7.1	6.5	6.2	7.1	6.5	6.2	4.1	-	-	4.1	-	-
Critical Hdwy Stg 1	6.1	5.5	-	6.1	5.5	-	-	-	-	-	-	-
Critical Hdwy Stg 2	6.1	5.5	-	6.1	5.5	-	-	-	-	-	-	-
Follow-up Hdwy	3.5	4	3.3	3.5	4	3.3	2.2	-	-	2.2	-	-
Pot Cap-1 Maneuver	618	587	909	633	577	855	1438	-	-	1397	-	-
Stage 1	864	782	-	813	744	-	-	-	-	-	-	-
Stage 2	811	744	-	878	772	-	-	-	-	-	-	-
Platoon blocked, %								-	-		-	-
Mov Cap-1 Maneuver	613	584	906	628	575	854	1435	-	-	1397	-	-
Mov Cap-2 Maneuver	613	584	-	628	575	-	-	-	-	-	-	-
Stage 1	862	780	-	811	743	-	-	-	-	-	-	-
Stage 2	806	743	-	873	770	-	-	-	-	-	-	-

Approach	EB	WB	NB	SB
HCM Control Delay, s/v	10.94	9.23	0.08	0.05
HCM LOS	B	A		

Minor Lane/Major Mvmt	NBL	NBT	NBR	EBLn1	WBLn1	SBL	SBT	SBR
Capacity (veh/h)	20	-	-	635	854	12	-	-
HCM Lane V/C Ratio	0.001	-	-	0.046	0.002	0.001	-	-
HCM Control Delay (s/veh)	7.5	0	-	10.9	9.2	7.6	0	-
HCM Lane LOS	A	A	-	B	A	A	A	-
HCM 95th %tile Q(veh)	0	-	-	0.1	0	0	-	-

Intersection	
Int Delay, s/veh	0.8

Movement	WBL	WBR	NBT	NBR	SBL	SBT
Lane Configurations						
Traffic Vol, veh/h	1	35	460	0	35	445
Future Vol, veh/h	1	35	460	0	35	445
Conflicting Peds, #/hr	3	3	0	3	3	0
Sign Control	Stop	Stop	Free	Free	Free	Free
RT Channelized	-	None	-	None	-	None
Storage Length	0	-	-	-	-	-
Veh in Median Storage, #	0	-	0	-	-	0
Grade, %	0	-	0	-	-	0
Peak Hour Factor	88	88	88	88	88	88
Heavy Vehicles, %	11	11	0	0	1	1
Mvmt Flow	1	40	523	0	40	506

Major/Minor	Minor1		Major1		Major2	
Conflicting Flow All	1114	529	0	0	526	0
Stage 1	526	-	-	-	-	-
Stage 2	588	-	-	-	-	-
Critical Hdwy	6.51	6.31	-	-	4.11	-
Critical Hdwy Stg 1	5.51	-	-	-	-	-
Critical Hdwy Stg 2	5.51	-	-	-	-	-
Follow-up Hdwy	3.599	3.399	-	-	2.209	-
Pot Cap-1 Maneuver	221	533	-	-	1046	-
Stage 1	575	-	-	-	-	-
Stage 2	538	-	-	-	-	-
Platoon blocked, %			-	-		-
Mov Cap-1 Maneuver	208	530	-	-	1043	-
Mov Cap-2 Maneuver	208	-	-	-	-	-
Stage 1	574	-	-	-	-	-
Stage 2	508	-	-	-	-	-

Approach	WB	NB	SB
HCM Control Delay, s/v	12.71	0	0.63
HCM LOS	B		

Minor Lane/Major Mvmt	NBT	NBR	WBLn1	SBL	SBT
Capacity (veh/h)	-	-	508	131	-
HCM Lane V/C Ratio	-	-	0.081	0.038	-
HCM Control Delay (s/veh)	-	-	12.7	8.6	0
HCM Lane LOS	-	-	B	A	A
HCM 95th %tile Q(veh)	-	-	0.3	0.1	-

Movement	EBL	EBT	EBR	WBL	WBT	WBR	NBL	NBT	NBR	SBL	SBT	SBR
Lane Configurations												
Traffic Volume (vph)	35	375	80	0	0	0	75	135	285	30	400	595
Future Volume (vph)	35	375	80	0	0	0	75	135	285	30	400	595
Ideal Flow (vphpl)	1900	1900	1900	1900	1900	1900	1900	1900	1900	1900	1900	1900
Total Lost time (s)		8.5	8.5				5.5	5.5		5.9	5.5	5.5
Lane Util. Factor		1.00	1.00				1.00	1.00		1.00	1.00	1.00
Frpb, ped/bikes		1.00	0.97				1.00	0.97		1.00	1.00	0.97
Flpb, ped/bikes		0.99	1.00				0.99	1.00		1.00	1.00	1.00
Frt		1.00	0.85				1.00	0.89		1.00	1.00	0.85
Flt Protected		0.99	1.00				0.95	1.00		0.95	1.00	1.00
Satd. Flow (prot)		1891	1570				1779	1644		1805	1900	1576
Flt Permitted		0.99	1.00				0.51	1.00		0.20	1.00	1.00
Satd. Flow (perm)		1891	1570				967	1644		381	1900	1576
Peak-hour factor, PHF	0.95	0.95	0.95	0.95	0.95	0.95	0.95	0.95	0.95	0.95	0.95	0.95
Adj. Flow (vph)	37	395	84	0	0	0	79	142	300	32	421	626
RTOR Reduction (vph)	0	0	55	0	0	0	0	70	0	0	0	317
Lane Group Flow (vph)	0	432	29	0	0	0	79	372	0	32	421	309
Confl. Peds. (#/hr)	2		4	8		6	4		8	6		2
Heavy Vehicles (%)	0%	0%	0%	0%	0%	0%	1%	1%	1%	0%	0%	0%
Turn Type	Perm	NA	Perm				Perm	NA		pm+pt	NA	Perm
Protected Phases		4						2		1	6	
Permitted Phases	4		4				2			6		6
Actuated Green, G (s)		32.9	32.9				26.9	26.9		42.7	42.7	42.7
Effective Green, g (s)		29.9	29.9				26.9	26.9		42.7	42.7	42.7
Actuated g/C Ratio		0.35	0.35				0.31	0.31		0.49	0.49	0.49
Clearance Time (s)		5.5	5.5				5.5	5.5		5.9	5.5	5.5
Vehicle Extension (s)		6.0	6.0				3.0	3.0		3.0	3.0	3.0
Lane Grp Cap (vph)		652	542				300	510		350	936	777
v/s Ratio Prot								c0.23		0.01	c0.22	
v/s Ratio Perm		0.23	0.02				0.08			0.03		0.20
v/c Ratio		0.66	0.05				0.26	0.73		0.09	0.44	0.39
Uniform Delay, d1		24.0	18.9				22.4	26.6		13.6	14.2	13.8
Progression Factor		1.00	1.00				1.00	1.00		0.92	0.88	0.80
Incremental Delay, d2		3.9	0.1				0.4	5.3		0.1	0.3	0.3
Delay (s)		28.0	19.0				22.8	31.9		12.7	12.9	11.4
Level of Service		C	B				C	C		B	B	B
Approach Delay (s/veh)		26.5			0.0			30.5			12.1	
Approach LOS		C			A			C			B	

Intersection Summary			
HCM 2000 Control Delay (s/veh)	20.2	HCM 2000 Level of Service	C
HCM 2000 Volume to Capacity ratio	0.68		
Actuated Cycle Length (s)	86.6	Sum of lost time (s)	19.9
Intersection Capacity Utilization	74.3%	ICU Level of Service	D
Analysis Period (min)	15		

c Critical Lane Group

Movement	EBL	EBR	NBL	NBT	SBT	SBR
Lane Configurations						
Traffic Volume (vph)	2	270	0	175	750	0
Future Volume (vph)	2	270	0	175	750	0
Ideal Flow (vphpl)	1900	1900	1900	1900	1900	1900
Total Lost time (s)	5.9	5.9		5.5	5.5	
Lane Util. Factor	1.00	1.00		1.00	0.95	
Frpb, ped/bikes	1.00	0.98		1.00	1.00	
Flpb, ped/bikes	1.00	1.00		1.00	1.00	
Frt	1.00	0.85		1.00	1.00	
Flt Protected	0.95	1.00		1.00	1.00	
Satd. Flow (prot)	1805	1591		1900	3610	
Flt Permitted	0.95	1.00		1.00	1.00	
Satd. Flow (perm)	1805	1591		1900	3610	
Peak-hour factor, PHF	0.95	0.95	0.95	0.95	0.95	0.95
Adj. Flow (vph)	2	284	0	184	789	0
RTOR Reduction (vph)	0	203	0	0	0	0
Lane Group Flow (vph)	2	81	0	184	789	0
Confl. Peds. (#/hr)	1	1	1			1
Heavy Vehicles (%)	0%	0%	0%	0%	0%	0%
Turn Type	Prot	Perm		NA	NA	
Protected Phases	1			2 4	2 4	
Permitted Phases		1				
Actuated Green, G (s)	9.9	9.9		65.3	65.3	
Effective Green, g (s)	9.9	9.9		65.3	65.3	
Actuated g/C Ratio	0.11	0.11		0.75	0.75	
Clearance Time (s)	5.9	5.9				
Vehicle Extension (s)	3.0	3.0				
Lane Grp Cap (vph)	206	181		1432	2722	
v/s Ratio Prot	0.00			0.10	c0.22	
v/s Ratio Perm		c0.05				
v/c Ratio	0.00	0.44		0.12	0.28	
Uniform Delay, d1	34.0	35.8		2.9	3.3	
Progression Factor	1.00	1.00		0.17	1.00	
Incremental Delay, d2	0.0	1.7		0.0	0.0	
Delay (s)	34.0	37.5		0.5	3.4	
Level of Service	C	D		A	A	
Approach Delay (s/veh)	37.5			0.5	3.4	
Approach LOS	D			A	A	

Intersection Summary			
HCM 2000 Control Delay (s/veh)	10.7	HCM 2000 Level of Service	B
HCM 2000 Volume to Capacity ratio	0.33		
Actuated Cycle Length (s)	86.6	Sum of lost time (s)	16.9
Intersection Capacity Utilization	47.1%	ICU Level of Service	A
Analysis Period (min)	15		

c Critical Lane Group

Movement	EBL	EBT	EBR	WBL	WBT	WBR	NBL	NBT	NBR	SBL	SBT	SBR
Lane Configurations												
Traffic Volume (veh/h)	0	0	0	740	55	3	175	0	0	0	5	1
Future Volume (veh/h)	0	0	0	740	55	3	175	0	0	0	5	1
Initial Q (Qb), veh				0	0	0	0	0	0	0	0	0
Lane Width Adj.				1.00	1.00	1.00	1.00	1.00	1.00	1.00	1.00	1.00
Ped-Bike Adj(A_pbT)				1.00		1.00	1.00		1.00	1.00		1.00
Parking Bus, Adj				1.00	1.00	1.00	1.00	1.00	1.00	1.00	1.00	1.00
Work Zone On Approach					No			No			No	
Adj Sat Flow, veh/h/ln				1900	1900	1900	1900	1900	0	0	1900	1900
Adj Flow Rate, veh/h				763	57	3	180	0	0	0	5	1
Peak Hour Factor				0.97	0.97	0.97	0.97	0.97	0.97	0.97	0.97	0.97
Percent Heavy Veh, %				0	0	0	0	0	0	0	0	0
Cap, veh/h				860	64	3	397	0	0	0	258	52
Arrive On Green				0.58	0.51	0.58	0.17	0.00	0.00	0.00	0.17	0.17
Sat Flow, veh/h				1682	126	7	1409	0	0	0	1537	307
Grp Volume(v), veh/h				823	0	0	180	0	0	0	0	6
Grp Sat Flow(s),veh/h/ln				1815	0	0	1409	0	0	0	0	1845
Q Serve(g_s), s				17.7	0.0	0.0	5.4	0.0	0.0	0.0	0.0	0.1
Cycle Q Clear(g_c), s				17.7	0.0	0.0	5.5	0.0	0.0	0.0	0.0	0.1
Prop In Lane				0.93		0.00	1.00		0.00	0.00		0.17
Lane Grp Cap(c), veh/h				928	0	0	397	0	0	0	0	309
V/C Ratio(X)				0.89	0.00	0.00	0.45	0.00	0.00	0.00	0.00	0.02
Avail Cap(c_a), veh/h				1258	0	0	939	0	0	0	0	1007
HCM Platoon Ratio				1.00	1.00	1.00	1.00	1.00	1.00	1.00	1.00	1.00
Upstream Filter(I)				1.00	0.00	0.00	1.00	0.00	0.00	0.00	0.00	1.00
Uniform Delay (d), s/veh				8.4	0.0	0.0	17.9	0.0	0.0	0.0	0.0	15.6
Incr Delay (d2), s/veh				6.6	0.0	0.0	0.8	0.0	0.0	0.0	0.0	0.0
Initial Q Delay(d3), s/veh				0.0	0.0	0.0	0.0	0.0	0.0	0.0	0.0	0.0
%ile BackOfQ(50%),veh/ln				5.5	0.0	0.0	1.6	0.0	0.0	0.0	0.0	0.0
Unsig. Movement Delay, s/veh												
LnGrp Delay(d), s/veh				15.0	0.0	0.0	18.7	0.0	0.0	0.0	0.0	15.6
LnGrp LOS				B			B					B
Approach Vol, veh/h					823			180			6	
Approach Delay, s/veh					15.0			18.7			15.6	
Approach LOS					B			B			B	

Timer - Assigned Phs	4	6	8
Phs Duration (G+Y+Rc), s	13.0	31.8	13.0
Change Period (Y+Rc), s	5.5	5.9	5.5
Max Green Setting (Gmax), s	24.5	34.1	24.5
Max Q Clear Time (g_c+I1), s	2.1	19.7	7.5
Green Ext Time (p_c), s	0.0	6.3	0.8

Intersection Summary	
HCM 7th Control Delay, s/veh	15.7
HCM 7th LOS	B

Notes

User approved pedestrian interval to be less than phase max green.

Intersection	
Int Delay, s/veh	0.1

Movement	EBT	EBR	WBL	WBT	NBL	NBR
Lane Configurations						
Traffic Vol, veh/h	20	35	0	30	1	0
Future Vol, veh/h	20	35	0	30	1	0
Conflicting Peds, #/hr	0	8	5	0	8	5
Sign Control	Free	Free	Free	Free	Stop	Stop
RT Channelized	-	None	-	None	-	None
Storage Length	-	-	0	-	0	-
Veh in Median Storage, #	0	-	-	0	0	-
Grade, %	0	-	-	0	0	-
Peak Hour Factor	88	88	88	88	88	88
Heavy Vehicles, %	3	3	3	3	0	0
Mvmt Flow	23	40	0	34	1	0

Major/Minor	Major1		Major2		Minor1	
Conflicting Flow All	0	0	71	0	93	56
Stage 1	-	-	-	-	51	-
Stage 2	-	-	-	-	42	-
Critical Hdwy	-	-	4.13	-	6.4	6.2
Critical Hdwy Stg 1	-	-	-	-	5.4	-
Critical Hdwy Stg 2	-	-	-	-	5.4	-
Follow-up Hdwy	-	-	2.227	-	3.5	3.3
Pot Cap-1 Maneuver	-	-	1524	-	912	1017
Stage 1	-	-	-	-	977	-
Stage 2	-	-	-	-	986	-
Platoon blocked, %	-	-		-		
Mov Cap-1 Maneuver	-	-	1512	-	898	1004
Mov Cap-2 Maneuver	-	-	-	-	898	-
Stage 1	-	-	-	-	970	-
Stage 2	-	-	-	-	978	-

Approach	EB	WB	NB
HCM Control Delay, s/v	0	0	9.01
HCM LOS			A

Minor Lane/Major Mvmt	NBLn1	EBT	EBR	WBL	WBT
Capacity (veh/h)	898	-	-	1512	-
HCM Lane V/C Ratio	0.001	-	-	-	-
HCM Control Delay (s/veh)	9	-	-	0	-
HCM Lane LOS	A	-	-	A	-
HCM 95th %tile Q(veh)	0	-	-	0	-

Intersection	
Int Delay, s/veh	1.2

Movement	EBL	EBT	EBR	WBL	WBT	WBR	NBL	NBT	NBR	SBL	SBT	SBR
Lane Configurations												
Traffic Vol, veh/h	35	0	1	0	0	1	2	180	0	0	130	35
Future Vol, veh/h	35	0	1	0	0	1	2	180	0	0	130	35
Conflicting Peds, #/hr	1	0	1	1	0	1	1	0	1	1	0	1
Sign Control	Stop	Stop	Stop	Stop	Stop	Stop	Free	Free	Free	Free	Free	Free
RT Channelized	-	-	None	-	-	None	-	-	None	-	-	None
Storage Length	-	-	-	-	-	-	-	-	-	-	-	-
Veh in Median Storage, #	-	0	-	-	0	-	-	0	-	-	0	-
Grade, %	-	0	-	-	0	-	-	0	-	-	0	-
Peak Hour Factor	88	88	88	88	88	88	88	88	88	88	88	88
Heavy Vehicles, %	0	0	0	0	0	0	0	0	0	0	0	0
Mvmt Flow	40	0	1	0	0	1	2	205	0	0	148	40

Major/Minor	Minor2			Minor1			Major1			Major2		
Conflicting Flow All	379	379	170	359	399	207	189	0	0	206	0	0
Stage 1	169	169	-	210	210	-	-	-	-	-	-	-
Stage 2	210	210	-	149	189	-	-	-	-	-	-	-
Critical Hdwy	7.1	6.5	6.2	7.1	6.5	6.2	4.1	-	-	4.1	-	-
Critical Hdwy Stg 1	6.1	5.5	-	6.1	5.5	-	-	-	-	-	-	-
Critical Hdwy Stg 2	6.1	5.5	-	6.1	5.5	-	-	-	-	-	-	-
Follow-up Hdwy	3.5	4	3.3	3.5	4	3.3	2.2	-	-	2.2	-	-
Pot Cap-1 Maneuver	583	556	880	600	542	839	1398	-	-	1378	-	-
Stage 1	838	763	-	797	732	-	-	-	-	-	-	-
Stage 2	797	732	-	859	748	-	-	-	-	-	-	-
Platoon blocked, %								-	-		-	-
Mov Cap-1 Maneuver	580	554	878	597	540	837	1396	-	-	1377	-	-
Mov Cap-2 Maneuver	580	554	-	597	540	-	-	-	-	-	-	-
Stage 1	837	762	-	794	730	-	-	-	-	-	-	-
Stage 2	793	730	-	857	747	-	-	-	-	-	-	-

Approach	EB	WB	NB	SB
HCM Control Delay, s/v	11.61	9.3	0.08	0
HCM LOS	B	A		

Minor Lane/Major Mvmt	NBL	NBT	NBR	EBLn1	WBLn1	SBL	SBT	SBR
Capacity (veh/h)	20	-	-	585	837	1377	-	-
HCM Lane V/C Ratio	0.002	-	-	0.07	0.001	-	-	-
HCM Control Delay (s/veh)	7.6	0	-	11.6	9.3	0	-	-
HCM Lane LOS	A	A	-	B	A	A	-	-
HCM 95th %tile Q(veh)	0	-	-	0.2	0	0	-	-

Intersection	
Int Delay, s/veh	1.2

Movement	WBL	WBR	NBT	NBR	SBL	SBT
Lane Configurations						
Traffic Vol, veh/h	4	60	415	10	35	345
Future Vol, veh/h	4	60	415	10	35	345
Conflicting Peds, #/hr	1	1	0	1	1	0
Sign Control	Stop	Stop	Free	Free	Free	Free
RT Channelized	-	None	-	None	-	None
Storage Length	0	-	-	-	-	-
Veh in Median Storage, #	0	-	0	-	-	0
Grade, %	0	-	0	-	-	0
Peak Hour Factor	93	93	93	93	93	93
Heavy Vehicles, %	3	3	0	0	0	0
Mvmt Flow	4	65	446	11	38	371

Major/Minor	Minor1		Major1		Major2	
Conflicting Flow All	900	454	0	0	458	0
Stage 1	453	-	-	-	-	-
Stage 2	447	-	-	-	-	-
Critical Hdwy	6.43	6.23	-	-	4.1	-
Critical Hdwy Stg 1	5.43	-	-	-	-	-
Critical Hdwy Stg 2	5.43	-	-	-	-	-
Follow-up Hdwy	3.527	3.327	-	-	2.2	-
Pot Cap-1 Maneuver	308	604	-	-	1114	-
Stage 1	638	-	-	-	-	-
Stage 2	642	-	-	-	-	-
Platoon blocked, %			-	-		-
Mov Cap-1 Maneuver	294	603	-	-	1112	-
Mov Cap-2 Maneuver	294	-	-	-	-	-
Stage 1	638	-	-	-	-	-
Stage 2	614	-	-	-	-	-

Approach	WB	NB	SB
HCM Control Delay, s/v	12.24	0	0.77
HCM LOS	B		

Minor Lane/Major Mvmt	NBT	NBR	WBLn1	SBL	SBT
Capacity (veh/h)	-	-	566	166	-
HCM Lane V/C Ratio	-	-	0.122	0.034	-
HCM Control Delay (s/veh)	-	-	12.2	8.3	0
HCM Lane LOS	-	-	B	A	A
HCM 95th %tile Q(veh)	-	-	0.4	0.1	-

Movement	EBL	EBT	EBR	WBL	WBT	WBR	NBL	NBT	NBR	SBL	SBT	SBR
Lane Configurations												
Traffic Volume (vph)	75	375	65	0	0	0	45	145	285	25	310	410
Future Volume (vph)	75	375	65	0	0	0	45	145	285	25	310	410
Ideal Flow (vphpl)	1900	1900	1900	1900	1900	1900	1900	1900	1900	1900	1900	1900
Total Lost time (s)		8.5	8.5				5.5	5.5		5.9	5.5	5.5
Lane Util. Factor		1.00	1.00				1.00	1.00		1.00	1.00	1.00
Frpb, ped/bikes		1.00	0.97				1.00	0.97		1.00	1.00	1.00
Flpb, ped/bikes		1.00	1.00				0.99	1.00		1.00	1.00	1.00
Frt		1.00	0.85				1.00	0.90		1.00	1.00	0.85
Flt Protected		0.99	1.00				0.95	1.00		0.95	1.00	1.00
Satd. Flow (prot)		1884	1573				1798	1671		1805	1900	1615
Flt Permitted		0.99	1.00				0.56	1.00		0.22	1.00	1.00
Satd. Flow (perm)		1884	1573				1062	1671		428	1900	1615
Peak-hour factor, PHF	0.94	0.94	0.94	0.94	0.94	0.94	0.94	0.94	0.94	0.94	0.94	0.94
Adj. Flow (vph)	80	399	69	0	0	0	48	154	303	27	330	436
RTOR Reduction (vph)	0	0	45	0	0	0	0	61	0	0	0	220
Lane Group Flow (vph)	0	479	24	0	0	0	48	396	0	27	330	216
Confl. Peds. (#/hr)			3	6		3	3		6	3		
Heavy Vehicles (%)	0%	0%	0%	0%	0%	0%	0%	0%	0%	0%	0%	0%
Turn Type	Perm	NA	Perm				Perm	NA		pm+pt	NA	Perm
Protected Phases		4						2		1	6	
Permitted Phases	4		4				2			6		6
Actuated Green, G (s)		34.0	34.0				30.9	30.9		44.1	44.1	44.1
Effective Green, g (s)		31.0	31.0				30.9	30.9		44.1	44.1	44.1
Actuated g/C Ratio		0.35	0.35				0.35	0.35		0.49	0.49	0.49
Clearance Time (s)		5.5	5.5				5.5	5.5		5.9	5.5	5.5
Vehicle Extension (s)		6.0	6.0				3.0	3.0		3.0	3.0	3.0
Lane Grp Cap (vph)		655	547				368	579		324	940	799
v/s Ratio Prot								c0.24		0.01	c0.17	
v/s Ratio Perm		0.25	0.02				0.05			0.03		0.13
v/c Ratio		0.73	0.04				0.13	0.68		0.08	0.35	0.27
Uniform Delay, d1		25.4	19.2				19.9	24.9		13.8	13.7	13.1
Progression Factor		1.00	1.00				1.00	1.00		0.96	0.93	0.79
Incremental Delay, d2		5.7	0.0				0.1	3.3		0.1	0.2	0.1
Delay (s)		31.1	19.3				20.0	28.2		13.5	13.0	10.5
Level of Service		C	B				C	C		B	B	B
Approach Delay (s/veh)		29.6			0.0			27.4			11.7	
Approach LOS		C			A			C			B	

Intersection Summary			
HCM 2000 Control Delay (s/veh)	21.4	HCM 2000 Level of Service	C
HCM 2000 Volume to Capacity ratio	0.69		
Actuated Cycle Length (s)	89.1	Sum of lost time (s)	19.9
Intersection Capacity Utilization	76.9%	ICU Level of Service	D
Analysis Period (min)	15		

c Critical Lane Group

Movement	EBL	EBR	NBL	NBT	SBT	SBR
Lane Configurations						
Traffic Volume (vph)	1	155	0	225	585	0
Future Volume (vph)	1	155	0	225	585	0
Ideal Flow (vphpl)	1900	1900	1900	1900	1900	1900
Total Lost time (s)	5.9	5.9		5.5	5.5	
Lane Util. Factor	1.00	1.00		1.00	0.95	
Frt	1.00	0.85		1.00	1.00	
Flt Protected	0.95	1.00		1.00	1.00	
Satd. Flow (prot)	1805	1615		1900	3610	
Flt Permitted	0.95	1.00		1.00	1.00	
Satd. Flow (perm)	1805	1615		1900	3610	
Peak-hour factor, PHF	0.93	0.93	0.93	0.93	0.93	0.93
Adj. Flow (vph)	1	167	0	242	629	0
RTOR Reduction (vph)	0	153	0	0	0	0
Lane Group Flow (vph)	1	14	0	242	629	0
Heavy Vehicles (%)	0%	0%	0%	0%	0%	0%
Turn Type	Prot	Perm		NA	NA	
Protected Phases	1			2 4	2 4	
Permitted Phases		1				
Actuated Green, G (s)	7.3	7.3		70.4	70.4	
Effective Green, g (s)	7.3	7.3		70.4	70.4	
Actuated g/C Ratio	0.08	0.08		0.79	0.79	
Clearance Time (s)	5.9	5.9				
Vehicle Extension (s)	3.0	3.0				
Lane Grp Cap (vph)	147	132		1501	2852	
v/s Ratio Prot	0.00			0.13	c0.17	
v/s Ratio Perm		c0.01				
v/c Ratio	0.00	0.10		0.16	0.22	
Uniform Delay, d1	37.5	37.8		2.2	2.3	
Progression Factor	1.00	1.00		0.15	1.00	
Incremental Delay, d2	0.0	0.3		0.0	0.0	
Delay (s)	37.5	38.2		0.3	2.4	
Level of Service	D	D		A	A	
Approach Delay (s/veh)	38.2			0.3	2.4	
Approach LOS	D			A	A	

Intersection Summary			
HCM 2000 Control Delay (s/veh)	7.7	HCM 2000 Level of Service	A
HCM 2000 Volume to Capacity ratio	0.23		
Actuated Cycle Length (s)	89.1	Sum of lost time (s)	16.9
Intersection Capacity Utilization	35.3%	ICU Level of Service	A
Analysis Period (min)	15		
c Critical Lane Group			

Movement	EBL	EBT	EBR	WBL	WBT	WBR	NBL	NBT	NBR	SBL	SBT	SBR
Lane Configurations												
Traffic Volume (veh/h)	0	0	0	580	5	4	215	5	0	0	5	3
Future Volume (veh/h)	0	0	0	580	5	4	215	5	0	0	5	3
Initial Q (Qb), veh				0	0	0	0	0	0	0	0	0
Lane Width Adj.				1.00	1.00	1.00	1.00	1.00	1.00	1.00	1.00	1.00
Ped-Bike Adj(A_pbT)				1.00		1.00	1.00		1.00	1.00		1.00
Parking Bus, Adj				1.00	1.00	1.00	1.00	1.00	1.00	1.00	1.00	1.00
Work Zone On Approach					No			No			No	
Adj Sat Flow, veh/h/ln				1900	1900	1900	1900	1900	0	0	1900	1900
Adj Flow Rate, veh/h				624	5	4	231	5	0	0	5	3
Peak Hour Factor				0.93	0.93	0.93	0.93	0.93	0.93	0.93	0.93	0.93
Percent Heavy Veh, %				0	0	0	0	0	0	0	0	0
Cap, veh/h				737	6	5	489	7	0	0	250	150
Arrive On Green				0.49	0.41	0.49	0.23	0.23	0.00	0.00	0.23	0.23
Sat Flow, veh/h				1783	14	11	1379	30	0	0	1110	666
Grp Volume(v), veh/h				633	0	0	236	0	0	0	0	8
Grp Sat Flow(s),veh/h/ln				1809	0	0	1409	0	0	0	0	1777
Q Serve(g_s), s				12.2	0.0	0.0	6.1	0.0	0.0	0.0	0.0	0.1
Cycle Q Clear(g_c), s				12.2	0.0	0.0	6.3	0.0	0.0	0.0	0.0	0.1
Prop In Lane				0.99		0.01	0.98		0.00	0.00		0.37
Lane Grp Cap(c), veh/h				747	0	0	496	0	0	0	0	400
V/C Ratio(X)				0.85	0.00	0.00	0.48	0.00	0.00	0.00	0.00	0.02
Avail Cap(c_a), veh/h				1413	0	0	1055	0	0	0	0	1094
HCM Platoon Ratio				1.00	1.00	1.00	1.00	1.00	1.00	1.00	1.00	1.00
Upstream Filter(I)				1.00	0.00	0.00	1.00	0.00	0.00	0.00	0.00	1.00
Uniform Delay (d), s/veh				9.1	0.0	0.0	14.4	0.0	0.0	0.0	0.0	12.0
Incr Delay (d2), s/veh				3.3	0.0	0.0	0.7	0.0	0.0	0.0	0.0	0.0
Initial Q Delay(d3), s/veh				0.0	0.0	0.0	0.0	0.0	0.0	0.0	0.0	0.0
%ile BackOfQ(50%),veh/ln				3.6	0.0	0.0	1.7	0.0	0.0	0.0	0.0	0.0
Unsig. Movement Delay, s/veh												
LnGrp Delay(d), s/veh				12.4	0.0	0.0	15.1	0.0	0.0	0.0	0.0	12.0
LnGrp LOS				B			B					B
Approach Vol, veh/h					633			236			8	
Approach Delay, s/veh					12.4			15.1			12.0	
Approach LOS					B			B			B	

Timer - Assigned Phs	4	6	8
Phs Duration (G+Y+Rc), s	14.5	25.3	14.5
Change Period (Y+Rc), s	5.5	5.9	5.5
Max Green Setting (Gmax), s	24.5	34.1	24.5
Max Q Clear Time (g_c+I1), s	2.1	14.2	8.3
Green Ext Time (p_c), s	0.0	5.3	1.2

Intersection Summary	
HCM 7th Control Delay, s/veh	13.1
HCM 7th LOS	B

Notes

User approved pedestrian interval to be less than phase max green.

Intersection	
Int Delay, s/veh	2.6

Movement	EBT	EBR	WBL	WBT	NBL	NBR
Lane Configurations						
Traffic Vol, veh/h	15	25	1	25	25	1
Future Vol, veh/h	15	25	1	25	25	1
Conflicting Peds, #/hr	0	0	0	0	0	0
Sign Control	Free	Free	Free	Free	Stop	Stop
RT Channelized	-	None	-	None	-	None
Storage Length	-	-	0	-	0	-
Veh in Median Storage, #	0	-	-	0	0	-
Grade, %	0	-	-	0	0	-
Peak Hour Factor	84	84	84	84	84	84
Heavy Vehicles, %	2	2	7	7	0	0
Mvmt Flow	18	30	1	30	30	1

Major/Minor	Major1		Major2		Minor1	
Conflicting Flow All	0	0	48	0	65	33
Stage 1	-	-	-	-	33	-
Stage 2	-	-	-	-	32	-
Critical Hdwy	-	-	4.17	-	6.4	6.2
Critical Hdwy Stg 1	-	-	-	-	5.4	-
Critical Hdwy Stg 2	-	-	-	-	5.4	-
Follow-up Hdwy	-	-	2.263	-	3.5	3.3
Pot Cap-1 Maneuver	-	-	1528	-	946	1047
Stage 1	-	-	-	-	995	-
Stage 2	-	-	-	-	996	-
Platoon blocked, %	-	-		-		
Mov Cap-1 Maneuver	-	-	1528	-	945	1047
Mov Cap-2 Maneuver	-	-	-	-	945	-
Stage 1	-	-	-	-	995	-
Stage 2	-	-	-	-	995	-

Approach	EB	WB	NB
HCM Control Delay, s/v	0	0.28	8.92
HCM LOS			A

Minor Lane/Major Mvmt	NBLn1	EBT	EBR	WBL	WBT
Capacity (veh/h)	949	-	-	69	-
HCM Lane V/C Ratio	0.033	-	-	0.001	-
HCM Control Delay (s/veh)	8.9	-	-	7.4	0
HCM Lane LOS	A	-	-	A	A
HCM 95th %tile Q(veh)	0.1	-	-	0	-

Intersection	
Int Delay, s/veh	1.1

Movement	EBL	EBT	EBR	WBL	WBT	WBR	NBL	NBT	NBR	SBL	SBT	SBR
Lane Configurations												
Traffic Vol, veh/h	35	0	2	0	1	2	0	150	1	0	180	40
Future Vol, veh/h	35	0	2	0	1	2	0	150	1	0	180	40
Conflicting Peds, #/hr	1	0	1	0	0	0	1	0	0	0	0	1
Sign Control	Stop	Stop	Stop	Stop	Stop	Stop	Free	Free	Free	Free	Free	Free
RT Channelized	-	-	None	-	-	None	-	-	None	-	-	None
Storage Length	-	-	-	-	-	-	-	-	-	-	-	-
Veh in Median Storage, #	-	0	-	-	0	-	-	0	-	-	0	-
Grade, %	-	0	-	-	0	-	-	0	-	-	0	-
Peak Hour Factor	90	90	90	90	90	90	90	90	90	90	90	90
Heavy Vehicles, %	0	0	0	0	0	0	0	0	0	0	0	0
Mvmt Flow	39	0	2	0	1	2	0	167	1	0	200	44

Major/Minor	Minor2			Minor1			Major1			Major2		
Conflicting Flow All	391	391	224	368	413	168	245	0	0	168	0	0
Stage 1	223	223	-	167	167	-	-	-	-	-	-	-
Stage 2	168	168	-	201	245	-	-	-	-	-	-	-
Critical Hdwy	7.1	6.5	6.2	7.1	6.5	6.2	4.1	-	-	4.1	-	-
Critical Hdwy Stg 1	6.1	5.5	-	6.1	5.5	-	-	-	-	-	-	-
Critical Hdwy Stg 2	6.1	5.5	-	6.1	5.5	-	-	-	-	-	-	-
Follow-up Hdwy	3.5	4	3.3	3.5	4	3.3	2.2	-	-	2.2	-	-
Pot Cap-1 Maneuver	571	548	820	592	533	881	1332	-	-	1422	-	-
Stage 1	784	723	-	839	764	-	-	-	-	-	-	-
Stage 2	838	763	-	805	707	-	-	-	-	-	-	-
Platoon blocked, %								-	-		-	-
Mov Cap-1 Maneuver	568	547	819	590	532	880	1331	-	-	1422	-	-
Mov Cap-2 Maneuver	568	547	-	590	532	-	-	-	-	-	-	-
Stage 1	783	722	-	839	764	-	-	-	-	-	-	-
Stage 2	834	763	-	803	706	-	-	-	-	-	-	-

Approach	EB	WB	NB	SB
HCM Control Delay, s/v	11.71	10	0	0
HCM LOS	B	B		

Minor Lane/Major Mvmt	NBL	NBT	NBR	EBLn1	WBLn1	SBL	SBT	SBR
Capacity (veh/h)	1331	-	-	577	723	1422	-	-
HCM Lane V/C Ratio	-	-	-	0.071	0.005	-	-	-
HCM Control Delay (s/veh)	0	-	-	11.7	10	0	-	-
HCM Lane LOS	A	-	-	B	B	A	-	-
HCM 95th %tile Q(veh)	0	-	-	0.2	0	0	-	-

Intersection	
Int Delay, s/veh	1.5

Movement	WBL	WBR	NBT	NBR	SBL	SBT
Lane Configurations						
Traffic Vol, veh/h	10	70	360	10	30	375
Future Vol, veh/h	10	70	360	10	30	375
Conflicting Peds, #/hr	3	3	0	3	3	0
Sign Control	Stop	Stop	Free	Free	Free	Free
RT Channelized	-	None	-	None	-	None
Storage Length	0	-	-	-	-	-
Veh in Median Storage, #	0	-	0	-	-	0
Grade, %	0	-	0	-	-	0
Peak Hour Factor	85	85	85	85	85	85
Heavy Vehicles, %	0	0	0	0	0	0
Mvmt Flow	12	82	424	12	35	441

Major/Minor	Minor1		Major1		Major2	
Conflicting Flow All	947	435	0	0	438	0
Stage 1	432	-	-	-	-	-
Stage 2	515	-	-	-	-	-
Critical Hdwy	6.4	6.2	-	-	4.1	-
Critical Hdwy Stg 1	5.4	-	-	-	-	-
Critical Hdwy Stg 2	5.4	-	-	-	-	-
Follow-up Hdwy	3.5	3.3	-	-	2.2	-
Pot Cap-1 Maneuver	292	625	-	-	1132	-
Stage 1	659	-	-	-	-	-
Stage 2	604	-	-	-	-	-
Platoon blocked, %			-	-		-
Mov Cap-1 Maneuver	278	621	-	-	1129	-
Mov Cap-2 Maneuver	278	-	-	-	-	-
Stage 1	657	-	-	-	-	-
Stage 2	577	-	-	-	-	-

Approach	WB	NB	SB
HCM Control Delay, s/v	13.09	0	0.61
HCM LOS	B		

Minor Lane/Major Mvmt	NBT	NBR	WBLn1	SBL	SBT
Capacity (veh/h)	-	-	539	133	-
HCM Lane V/C Ratio	-	-	0.175	0.031	-
HCM Control Delay (s/veh)	-	-	13.1	8.3	0
HCM Lane LOS	-	-	B	A	A
HCM 95th %tile Q(veh)	-	-	0.6	0.1	-

Movement	EBL	EBT	EBR	WBL	WBT	WBR	NBL	NBT	NBR	SBL	SBT	SBR
Lane Configurations												
Traffic Volume (vph)	50	340	90	0	0	0	85	145	210	20	300	530
Future Volume (vph)	50	340	90	0	0	0	85	145	210	20	300	530
Ideal Flow (vphpl)	1900	1900	1900	1900	1900	1900	1900	1900	1900	1900	1900	1900
Total Lost time (s)		8.5	8.5				5.5	5.5		5.9	5.5	5.5
Lane Util. Factor		1.00	1.00				1.00	1.00		1.00	1.00	1.00
Frpb, ped/bikes		1.00	0.97				1.00	0.98		1.00	1.00	1.00
Flpb, ped/bikes		1.00	1.00				0.99	1.00		0.99	1.00	1.00
Frt		1.00	0.85				1.00	0.91		1.00	1.00	0.85
Flt Protected		0.99	1.00				0.95	1.00		0.95	1.00	1.00
Satd. Flow (prot)		1888	1576				1800	1698		1804	1900	1615
Flt Permitted		0.99	1.00				0.56	1.00		0.29	1.00	1.00
Satd. Flow (perm)		1888	1576				1071	1698		556	1900	1615
Peak-hour factor, PHF	0.93	0.93	0.93	0.93	0.93	0.93	0.93	0.93	0.93	0.93	0.93	0.93
Adj. Flow (vph)	54	366	97	0	0	0	91	156	226	22	323	570
RTOR Reduction (vph)	0	0	52	0	0	0	0	46	0	0	0	291
Lane Group Flow (vph)	0	420	45	0	0	0	91	336	0	22	323	279
Confl. Peds. (#/hr)			2	5		3	2		5	3		
Heavy Vehicles (%)	0%	0%	0%	0%	0%	0%	0%	0%	0%	0%	0%	0%
Turn Type	Perm	NA	Perm				Perm	NA		pm+pt	NA	Perm
Protected Phases		4						2		1	6	
Permitted Phases	4		4				2			6		6
Actuated Green, G (s)		33.1	33.1				29.1	29.1		42.3	42.3	42.3
Effective Green, g (s)		30.1	30.1				29.1	29.1		42.3	42.3	42.3
Actuated g/C Ratio		0.35	0.35				0.34	0.34		0.49	0.49	0.49
Clearance Time (s)		5.5	5.5				5.5	5.5		5.9	5.5	5.5
Vehicle Extension (s)		6.0	6.0				3.0	3.0		3.0	3.0	3.0
Lane Grp Cap (vph)		657	549				360	571		377	930	790
v/s Ratio Prot								c0.20		0.00	0.17	
v/s Ratio Perm		0.22	0.03				0.08			0.02		c0.17
v/c Ratio		0.63	0.08				0.25	0.58		0.05	0.34	0.35
Uniform Delay, d1		23.5	18.8				20.7	23.7		12.8	13.5	13.6
Progression Factor		1.00	1.00				1.00	1.00		0.97	0.93	0.95
Incremental Delay, d2		3.4	0.1				0.3	1.5		0.0	0.2	0.2
Delay (s)		27.0	19.0				21.1	25.2		12.6	12.9	13.2
Level of Service		C	B				C	C		B	B	B
Approach Delay (s/veh)		25.5			0.0			24.4			13.1	
Approach LOS		C			A			C			B	

Intersection Summary			
HCM 2000 Control Delay (s/veh)	19.3	HCM 2000 Level of Service	B
HCM 2000 Volume to Capacity ratio	0.60		
Actuated Cycle Length (s)	86.4	Sum of lost time (s)	19.9
Intersection Capacity Utilization	68.9%	ICU Level of Service	C
Analysis Period (min)	15		

c Critical Lane Group

Movement	EBL	EBR	NBL	NBT	SBT	SBR
Lane Configurations						
Traffic Volume (vph)	1	165	0	200	700	0
Future Volume (vph)	1	165	0	200	700	0
Ideal Flow (vphpl)	1900	1900	1900	1900	1900	1900
Total Lost time (s)	5.9	5.9		5.5	5.5	
Lane Util. Factor	1.00	1.00		1.00	0.95	
Frt	1.00	0.85		1.00	1.00	
Flt Protected	0.95	1.00		1.00	1.00	
Satd. Flow (prot)	1805	1615		1900	3610	
Flt Permitted	0.95	1.00		1.00	1.00	
Satd. Flow (perm)	1805	1615		1900	3610	
Peak-hour factor, PHF	0.95	0.95	0.95	0.95	0.95	0.95
Adj. Flow (vph)	1	174	0	211	737	0
RTOR Reduction (vph)	0	159	0	0	0	0
Lane Group Flow (vph)	1	15	0	211	737	0
Heavy Vehicles (%)	0%	0%	0%	0%	0%	0%
Turn Type	Prot	Perm		NA	NA	
Protected Phases	1			2 4	2 4	
Permitted Phases		1				
Actuated Green, G (s)	7.3	7.3		67.7	67.7	
Effective Green, g (s)	7.3	7.3		67.7	67.7	
Actuated g/C Ratio	0.08	0.08		0.78	0.78	
Clearance Time (s)	5.9	5.9				
Vehicle Extension (s)	3.0	3.0				
Lane Grp Cap (vph)	152	136		1488	2828	
v/s Ratio Prot	0.00			0.11	c0.20	
v/s Ratio Perm		c0.01				
v/c Ratio	0.00	0.10		0.14	0.26	
Uniform Delay, d1	36.2	36.5		2.2	2.5	
Progression Factor	1.00	1.00		0.12	1.00	
Incremental Delay, d2	0.0	0.3		0.0	0.0	
Delay (s)	36.2	36.8		0.3	2.5	
Level of Service	D	D		A	A	
Approach Delay (s/veh)	36.8			0.3	2.5	
Approach LOS	D			A	A	

Intersection Summary			
HCM 2000 Control Delay (s/veh)	7.5	HCM 2000 Level of Service	A
HCM 2000 Volume to Capacity ratio	0.27		
Actuated Cycle Length (s)	86.4	Sum of lost time (s)	16.9
Intersection Capacity Utilization	39.1%	ICU Level of Service	A
Analysis Period (min)	15		
c Critical Lane Group			

Movement	EBL	EBT	EBR	WBL	WBT	WBR	NBL	NBT	NBR	SBL	SBT	SBR
Lane Configurations												
Traffic Volume (veh/h)	0	0	0	695	5	1	200	3	0	0	3	3
Future Volume (veh/h)	0	0	0	695	5	1	200	3	0	0	3	3
Initial Q (Qb), veh				0	0	0	0	0	0	0	0	0
Lane Width Adj.				1.00	1.00	1.00	1.00	1.00	1.00	1.00	1.00	1.00
Ped-Bike Adj(A_pbT)				1.00		1.00	1.00		1.00	1.00		1.00
Parking Bus, Adj				1.00	1.00	1.00	1.00	1.00	1.00	1.00	1.00	1.00
Work Zone On Approach					No			No			No	
Adj Sat Flow, veh/h/ln				1900	1900	1900	1900	1900	0	0	1900	1900
Adj Flow Rate, veh/h				702	5	1	202	3	0	0	3	3
Peak Hour Factor				0.99	0.99	0.99	0.99	0.99	0.99	0.99	0.99	0.99
Percent Heavy Veh, %				0	0	0	0	0	0	0	0	0
Cap, veh/h				819	6	1	442	4	0	0	167	167
Arrive On Green				0.53	0.46	0.53	0.19	0.19	0.00	0.00	0.19	0.19
Sat Flow, veh/h				1794	13	3	1396	21	0	0	872	872
Grp Volume(v), veh/h				708	0	0	205	0	0	0	0	6
Grp Sat Flow(s),veh/h/ln				1810	0	0	1416	0	0	0	0	1743
Q Serve(g_s), s				13.8	0.0	0.0	5.5	0.0	0.0	0.0	0.0	0.1
Cycle Q Clear(g_c), s				13.8	0.0	0.0	5.6	0.0	0.0	0.0	0.0	0.1
Prop In Lane				0.99		0.00	0.99		0.00	0.00		0.50
Lane Grp Cap(c), veh/h				826	0	0	446	0	0	0	0	334
V/C Ratio(X)				0.86	0.00	0.00	0.46	0.00	0.00	0.00	0.00	0.02
Avail Cap(c_a), veh/h				1376	0	0	1032	0	0	0	0	1044
HCM Platoon Ratio				1.00	1.00	1.00	1.00	1.00	1.00	1.00	1.00	1.00
Upstream Filter(I)				1.00	0.00	0.00	1.00	0.00	0.00	0.00	0.00	1.00
Uniform Delay (d), s/veh				8.5	0.0	0.0	15.7	0.0	0.0	0.0	0.0	13.4
Incr Delay (d2), s/veh				3.5	0.0	0.0	0.7	0.0	0.0	0.0	0.0	0.0
Initial Q Delay(d3), s/veh				0.0	0.0	0.0	0.0	0.0	0.0	0.0	0.0	0.0
%ile BackOfQ(50%),veh/ln				3.9	0.0	0.0	1.6	0.0	0.0	0.0	0.0	0.0
Unsig. Movement Delay, s/veh												
LnGrp Delay(d), s/veh				12.0	0.0	0.0	16.4	0.0	0.0	0.0	0.0	13.4
LnGrp LOS				B			B					B
Approach Vol, veh/h					708			205			6	
Approach Delay, s/veh					12.0			16.4			13.4	
Approach LOS					B			B			B	

Timer - Assigned Phs		4		6		8	
Phs Duration (G+Y+Rc), s		13.3		27.6		13.3	
Change Period (Y+Rc), s		5.5		5.9		5.5	
Max Green Setting (Gmax), s		24.5		34.1		24.5	
Max Q Clear Time (g_c+I1), s		2.1		15.8		7.6	
Green Ext Time (p_c), s		0.0		5.9		1.0	

Intersection Summary	
HCM 7th Control Delay, s/veh	13.0
HCM 7th LOS	B

Notes

User approved pedestrian interval to be less than phase max green.

Intersection	
Int Delay, s/veh	5.3

Movement	EBT	EBR	WBL	WBT	NBL	NBR
Lane Configurations						
Traffic Vol, veh/h	2	40	0	10	65	0
Future Vol, veh/h	2	40	0	10	65	0
Conflicting Peds, #/hr	0	6	3	0	6	3
Sign Control	Free	Free	Free	Free	Stop	Stop
RT Channelized	-	None	-	None	-	None
Storage Length	-	-	0	-	0	-
Veh in Median Storage, #	0	-	-	0	0	-
Grade, %	0	-	-	0	0	-
Peak Hour Factor	47	47	47	47	47	47
Heavy Vehicles, %	0	0	0	0	0	0
Mvmt Flow	4	85	0	21	138	0

Major/Minor	Major1		Major2		Minor1	
Conflicting Flow All	0	0	95	0	80	56
Stage 1	-	-	-	-	53	-
Stage 2	-	-	-	-	27	-
Critical Hdwy	-	-	4.1	-	6.4	6.2
Critical Hdwy Stg 1	-	-	-	-	5.4	-
Critical Hdwy Stg 2	-	-	-	-	5.4	-
Follow-up Hdwy	-	-	2.2	-	3.5	3.3
Pot Cap-1 Maneuver	-	-	1511	-	927	1017
Stage 1	-	-	-	-	975	-
Stage 2	-	-	-	-	1000	-
Platoon blocked, %	-	-		-		
Mov Cap-1 Maneuver	-	-	1503	-	917	1008
Mov Cap-2 Maneuver	-	-	-	-	917	-
Stage 1	-	-	-	-	969	-
Stage 2	-	-	-	-	995	-

Approach	EB	WB	NB
HCM Control Delay, s/v	0	0	9.62
HCM LOS			A

Minor Lane/Major Mvmt	NBLn1	EBT	EBR	WBL	WBT
Capacity (veh/h)	917	-	-	1503	-
HCM Lane V/C Ratio	0.151	-	-	-	-
HCM Control Delay (s/veh)	9.6	-	-	0	-
HCM Lane LOS	A	-	-	A	-
HCM 95th %tile Q(veh)	0.5	-	-	0	-

Intersection	
Int Delay, s/veh	1.1

Movement	EBL	EBT	EBR	WBL	WBT	WBR	NBL	NBT	NBR	SBL	SBT	SBR
Lane Configurations												
Traffic Vol, veh/h	29	0	3	0	0	2	2	186	0	1	123	27
Future Vol, veh/h	29	0	3	0	0	2	2	186	0	1	123	27
Conflicting Peds, #/hr	2	0	2	0	0	0	2	0	0	0	0	2
Sign Control	Stop	Stop	Stop	Stop	Stop	Stop	Free	Free	Free	Free	Free	Free
RT Channelized	-	-	None	-	-	None	-	-	None	-	-	None
Storage Length	-	-	-	-	-	-	-	-	-	-	-	-
Veh in Median Storage, #	-	0	-	-	0	-	-	0	-	-	0	-
Grade, %	-	0	-	-	0	-	-	0	-	-	0	-
Peak Hour Factor	95	95	95	95	95	95	95	95	95	95	95	95
Heavy Vehicles, %	0	0	0	0	0	0	0	0	0	0	0	0
Mvmt Flow	31	0	3	0	0	2	2	196	0	1	129	28

Major/Minor	Minor2			Minor1			Major1			Major2		
Conflicting Flow All	350	348	148	334	362	198	160	0	0	196	0	0
Stage 1	148	148	-	200	200	-	-	-	-	-	-	-
Stage 2	202	200	-	134	162	-	-	-	-	-	-	-
Critical Hdwy	7.1	6.5	6.2	7.1	6.5	6.2	4.1	-	-	4.1	-	-
Critical Hdwy Stg 1	6.1	5.5	-	6.1	5.5	-	-	-	-	-	-	-
Critical Hdwy Stg 2	6.1	5.5	-	6.1	5.5	-	-	-	-	-	-	-
Follow-up Hdwy	3.5	4	3.3	3.5	4	3.3	2.2	-	-	2.2	-	-
Pot Cap-1 Maneuver	609	579	904	624	569	848	1432	-	-	1389	-	-
Stage 1	860	779	-	806	739	-	-	-	-	-	-	-
Stage 2	805	739	-	875	768	-	-	-	-	-	-	-
Platoon blocked, %								-	-		-	-
Mov Cap-1 Maneuver	603	577	901	619	566	847	1429	-	-	1389	-	-
Mov Cap-2 Maneuver	603	577	-	619	566	-	-	-	-	-	-	-
Stage 1	857	777	-	805	738	-	-	-	-	-	-	-
Stage 2	800	738	-	869	766	-	-	-	-	-	-	-

Approach	EB	WB	NB	SB
HCM Control Delay, s/v	11.11	9.26	0.08	0.05
HCM LOS	B	A		

Minor Lane/Major Mvmt	NBL	NBT	NBR	EBLn1	WBLn1	SBL	SBT	SBR
Capacity (veh/h)	19	-	-	623	847	12	-	-
HCM Lane V/C Ratio	0.001	-	-	0.054	0.002	0.001	-	-
HCM Control Delay (s/veh)	7.5	0	-	11.1	9.3	7.6	0	-
HCM Lane LOS	A	A	-	B	A	A	A	-
HCM 95th %tile Q(veh)	0	-	-	0.2	0	0	-	-

Intersection	
Int Delay, s/veh	2.3

Movement	WBL	WBR	NBT	NBR	SBL	SBT
Lane Configurations						
Traffic Vol, veh/h	6	88	460	10	121	445
Future Vol, veh/h	6	88	460	10	121	445
Conflicting Peds, #/hr	3	3	0	3	3	0
Sign Control	Stop	Stop	Free	Free	Free	Free
RT Channelized	-	None	-	None	-	None
Storage Length	0	-	-	-	-	-
Veh in Median Storage, #	0	-	0	-	-	0
Grade, %	0	-	0	-	-	0
Peak Hour Factor	88	88	88	88	88	88
Heavy Vehicles, %	11	11	0	0	1	1
Mvmt Flow	7	100	523	11	138	506

Major/Minor	Minor1		Major1		Major2	
Conflicting Flow All	1315	534	0	0	537	0
Stage 1	531	-	-	-	-	-
Stage 2	784	-	-	-	-	-
Critical Hdwy	6.51	6.31	-	-	4.11	-
Critical Hdwy Stg 1	5.51	-	-	-	-	-
Critical Hdwy Stg 2	5.51	-	-	-	-	-
Follow-up Hdwy	3.599	3.399	-	-	2.209	-
Pot Cap-1 Maneuver	167	529	-	-	1036	-
Stage 1	572	-	-	-	-	-
Stage 2	435	-	-	-	-	-
Platoon blocked, %			-	-		-
Mov Cap-1 Maneuver	135	526	-	-	1033	-
Mov Cap-2 Maneuver	135	-	-	-	-	-
Stage 1	570	-	-	-	-	-
Stage 2	353	-	-	-	-	-

Approach	WB	NB	SB
HCM Control Delay, s/v	15.67	0	1.93
HCM LOS	C		

Minor Lane/Major Mvmt	NBT	NBR	WBLn1	SBL	SBT
Capacity (veh/h)	-	-	444	385	-
HCM Lane V/C Ratio	-	-	0.241	0.133	-
HCM Control Delay (s/veh)	-	-	15.7	9	0
HCM Lane LOS	-	-	C	A	A
HCM 95th %tile Q(veh)	-	-	0.9	0.5	-

Movement	EBL	EBT	EBR	WBL	WBT	WBR	NBL	NBT	NBR	SBL	SBT	SBR
Lane Configurations												
Traffic Volume (vph)	35	375	81	0	0	0	75	150	323	30	485	595
Future Volume (vph)	35	375	81	0	0	0	75	150	323	30	485	595
Ideal Flow (vphpl)	1900	1900	1900	1900	1900	1900	1900	1900	1900	1900	1900	1900
Total Lost time (s)		8.5	8.5				5.5	5.5		5.9	5.5	5.5
Lane Util. Factor		1.00	1.00				1.00	1.00		1.00	1.00	1.00
Frpb, ped/bikes		1.00	0.97				1.00	0.97		1.00	1.00	0.97
Flpb, ped/bikes		0.99	1.00				0.99	1.00		1.00	1.00	1.00
Frt		1.00	0.85				1.00	0.89		1.00	1.00	0.85
Flt Protected		0.99	1.00				0.95	1.00		0.95	1.00	1.00
Satd. Flow (prot)		1891	1569				1779	1641		1805	1900	1576
Flt Permitted		0.99	1.00				0.47	1.00		0.14	1.00	1.00
Satd. Flow (perm)		1891	1569				890	1641		267	1900	1576
Peak-hour factor, PHF	0.95	0.95	0.95	0.95	0.95	0.95	0.95	0.95	0.95	0.95	0.95	0.95
Adj. Flow (vph)	37	395	85	0	0	0	79	158	340	32	511	626
RTOR Reduction (vph)	0	0	57	0	0	0	0	71	0	0	0	302
Lane Group Flow (vph)	0	432	28	0	0	0	79	427	0	32	511	324
Confl. Peds. (#/hr)	2		4	8		6	4		8	6		2
Heavy Vehicles (%)	0%	0%	0%	0%	0%	0%	1%	1%	1%	0%	0%	0%
Turn Type	Perm	NA	Perm				Perm	NA		pm+pt	NA	Perm
Protected Phases		4						2		1	6	
Permitted Phases	4		4				2			6		6
Actuated Green, G (s)		33.5	33.5				28.9	28.9		47.8	47.8	47.8
Effective Green, g (s)		30.5	30.5				28.9	28.9		47.8	47.8	47.8
Actuated g/C Ratio		0.33	0.33				0.31	0.31		0.52	0.52	0.52
Clearance Time (s)		5.5	5.5				5.5	5.5		5.9	5.5	5.5
Vehicle Extension (s)		6.0	6.0				3.0	3.0		3.0	3.0	3.0
Lane Grp Cap (vph)		624	518				278	513		354	983	816
v/s Ratio Prot								c0.26		0.01	c0.27	
v/s Ratio Perm		0.23	0.02				0.09			0.03		0.21
v/c Ratio		0.69	0.05				0.28	0.83		0.09	0.51	0.39
Uniform Delay, d1		26.8	21.0				23.9	29.4		14.3	14.6	13.5
Progression Factor		1.00	1.00				1.00	1.00		0.88	0.83	0.69
Incremental Delay, d2		4.9	0.1				0.5	11.0		0.1	0.4	0.3
Delay (s)		31.7	21.1				24.4	40.5		12.7	12.7	9.6
Level of Service		C	C				C	D		B	B	A
Approach Delay (s/veh)		30.0			0.0			38.3			11.0	
Approach LOS		C			A			D			B	

Intersection Summary			
HCM 2000 Control Delay (s/veh)	22.4	HCM 2000 Level of Service	C
HCM 2000 Volume to Capacity ratio	0.74		
Actuated Cycle Length (s)	92.3	Sum of lost time (s)	19.9
Intersection Capacity Utilization	77.4%	ICU Level of Service	D
Analysis Period (min)	15		

c Critical Lane Group

Movement	EBL	EBR	NBL	NBT	SBT	SBR
Lane Configurations						
Traffic Volume (vph)	2	298	0	190	807	0
Future Volume (vph)	2	298	0	190	807	0
Ideal Flow (vphpl)	1900	1900	1900	1900	1900	1900
Total Lost time (s)	5.9	5.9		5.5	5.5	
Lane Util. Factor	1.00	1.00		1.00	0.95	
Frpb, ped/bikes	1.00	0.98		1.00	1.00	
Flpb, ped/bikes	1.00	1.00		1.00	1.00	
Frt	1.00	0.85		1.00	1.00	
Flt Protected	0.95	1.00		1.00	1.00	
Satd. Flow (prot)	1805	1592		1900	3610	
Flt Permitted	0.95	1.00		1.00	1.00	
Satd. Flow (perm)	1805	1592		1900	3610	
Peak-hour factor, PHF	0.95	0.95	0.95	0.95	0.95	0.95
Adj. Flow (vph)	2	314	0	200	849	0
RTOR Reduction (vph)	0	174	0	0	0	0
Lane Group Flow (vph)	2	140	0	200	849	0
Confl. Peds. (#/hr)	1	1	1			1
Heavy Vehicles (%)	0%	0%	0%	0%	0%	0%
Turn Type	Prot	Perm		NA	NA	
Protected Phases	1			2 4	2 4	
Permitted Phases		1				
Actuated Green, G (s)	13.0	13.0		67.9	67.9	
Effective Green, g (s)	13.0	13.0		67.9	67.9	
Actuated g/C Ratio	0.14	0.14		0.74	0.74	
Clearance Time (s)	5.9	5.9				
Vehicle Extension (s)	3.0	3.0				
Lane Grp Cap (vph)	254	224		1397	2655	
v/s Ratio Prot	0.00			0.11	c0.24	
v/s Ratio Perm		c0.09				
v/c Ratio	0.00	0.62		0.14	0.31	
Uniform Delay, d1	34.1	37.3		3.6	4.2	
Progression Factor	1.00	1.00		0.17	1.00	
Incremental Delay, d2	0.0	5.3		0.0	0.0	
Delay (s)	34.1	42.6		0.6	4.2	
Level of Service	C	D		A	A	
Approach Delay (s/veh)	42.5			0.6	4.2	
Approach LOS	D			A	A	

Intersection Summary			
HCM 2000 Control Delay (s/veh)	12.6	HCM 2000 Level of Service	B
HCM 2000 Volume to Capacity ratio	0.40		
Actuated Cycle Length (s)	92.3	Sum of lost time (s)	16.9
Intersection Capacity Utilization	50.4%	ICU Level of Service	A
Analysis Period (min)	15		

c Critical Lane Group

Movement	EBL	EBT	EBR	WBL	WBT	WBR	NBL	NBT	NBR	SBL	SBT	SBR
Lane Configurations												
Traffic Volume (veh/h)	0	0	0	797	55	3	190	0	0	0	5	1
Future Volume (veh/h)	0	0	0	797	55	3	190	0	0	0	5	1
Initial Q (Qb), veh				0	0	0	0	0	0	0	0	0
Lane Width Adj.				1.00	1.00	1.00	1.00	1.00	1.00	1.00	1.00	1.00
Ped-Bike Adj(A_pbT)				1.00		1.00	1.00		1.00	1.00		1.00
Parking Bus, Adj				1.00	1.00	1.00	1.00	1.00	1.00	1.00	1.00	1.00
Work Zone On Approach					No			No			No	
Adj Sat Flow, veh/h/ln				1900	1900	1900	1900	1900	0	0	1900	1900
Adj Flow Rate, veh/h				822	57	3	196	0	0	0	5	1
Peak Hour Factor				0.97	0.97	0.97	0.97	0.97	0.97	0.97	0.97	0.97
Percent Heavy Veh, %				0	0	0	0	0	0	0	0	0
Cap, veh/h				894	62	3	400	0	0	0	277	55
Arrive On Green				0.59	0.53	0.59	0.18	0.00	0.00	0.00	0.18	0.18
Sat Flow, veh/h				1691	117	6	1411	0	0	0	1537	307
Grp Volume(v), veh/h				882	0	0	196	0	0	0	0	6
Grp Sat Flow(s),veh/h/ln				1814	0	0	1411	0	0	0	0	1845
Q Serve(g_s), s				21.6	0.0	0.0	6.4	0.0	0.0	0.0	0.0	0.1
Cycle Q Clear(g_c), s				21.6	0.0	0.0	6.6	0.0	0.0	0.0	0.0	0.1
Prop In Lane				0.93		0.00	1.00		0.00	0.00		0.17
Lane Grp Cap(c), veh/h				959	0	0	400	0	0	0	0	332
V/C Ratio(X)				0.92	0.00	0.00	0.49	0.00	0.00	0.00	0.00	0.02
Avail Cap(c_a), veh/h				1142	0	0	852	0	0	0	0	915
HCM Platoon Ratio				1.00	1.00	1.00	1.00	1.00	1.00	1.00	1.00	1.00
Upstream Filter(I)				1.00	0.00	0.00	1.00	0.00	0.00	0.00	0.00	1.00
Uniform Delay (d), s/veh				9.3	0.0	0.0	19.4	0.0	0.0	0.0	0.0	16.7
Incr Delay (d2), s/veh				10.9	0.0	0.0	0.9	0.0	0.0	0.0	0.0	0.0
Initial Q Delay(d3), s/veh				0.0	0.0	0.0	0.0	0.0	0.0	0.0	0.0	0.0
%ile BackOfQ(50%),veh/ln				7.8	0.0	0.0	2.0	0.0	0.0	0.0	0.0	0.1
Unsig. Movement Delay, s/veh												
LnGrp Delay(d), s/veh				20.2	0.0	0.0	20.3	0.0	0.0	0.0	0.0	16.7
LnGrp LOS				C			C					B
Approach Vol, veh/h					882			196			6	
Approach Delay, s/veh					20.2			20.3			16.7	
Approach LOS					C			C			B	

Timer - Assigned Phs	4	6	8
Phs Duration (G+Y+Rc), s	14.4	35.0	14.4
Change Period (Y+Rc), s	5.5	5.9	5.5
Max Green Setting (Gmax), s	24.5	34.1	24.5
Max Q Clear Time (g_c+I1), s	2.1	23.6	8.6
Green Ext Time (p_c), s	0.0	5.5	0.9

Intersection Summary	
HCM 7th Control Delay, s/veh	20.2
HCM 7th LOS	C

Notes

User approved pedestrian interval to be less than phase max green.

Intersection	
Int Delay, s/veh	2.4

Movement	EBT	EBR	WBL	WBT	NBL	NBR
Lane Configurations						
Traffic Vol, veh/h	20	131	0	30	59	0
Future Vol, veh/h	20	131	0	30	59	0
Conflicting Peds, #/hr	0	8	5	0	8	5
Sign Control	Free	Free	Free	Free	Stop	Stop
RT Channelized	-	None	-	None	-	None
Storage Length	-	-	0	-	0	-
Veh in Median Storage, #	0	-	-	0	0	-
Grade, %	0	-	-	0	0	-
Peak Hour Factor	88	88	88	88	88	88
Heavy Vehicles, %	3	3	3	3	0	0
Mvmt Flow	23	149	0	34	67	0

Major/Minor	Major1		Major2		Minor1	
Conflicting Flow All	0	0	180	0	147	110
Stage 1	-	-	-	-	105	-
Stage 2	-	-	-	-	42	-
Critical Hdwy	-	-	4.13	-	6.4	6.2
Critical Hdwy Stg 1	-	-	-	-	5.4	-
Critical Hdwy Stg 2	-	-	-	-	5.4	-
Follow-up Hdwy	-	-	2.227	-	3.5	3.3
Pot Cap-1 Maneuver	-	-	1390	-	850	949
Stage 1	-	-	-	-	924	-
Stage 2	-	-	-	-	986	-
Platoon blocked, %	-	-		-		
Mov Cap-1 Maneuver	-	-	1379	-	837	937
Mov Cap-2 Maneuver	-	-	-	-	837	-
Stage 1	-	-	-	-	917	-
Stage 2	-	-	-	-	978	-

Approach	EB	WB	NB
HCM Control Delay, s/v	0	0	9.68
HCM LOS			A

Minor Lane/Major Mvmt	NBLn1	EBT	EBR	WBL	WBT
Capacity (veh/h)	837	-	-	1379	-
HCM Lane V/C Ratio	0.08	-	-	-	-
HCM Control Delay (s/veh)	9.7	-	-	0	-
HCM Lane LOS	A	-	-	A	-
HCM 95th %tile Q(veh)	0.3	-	-	0	-

Intersection	
Int Delay, s/veh	1.2

Movement	EBL	EBT	EBR	WBL	WBT	WBR	NBL	NBT	NBR	SBL	SBT	SBR
Lane Configurations												
Traffic Vol, veh/h	37	0	1	0	0	1	2	183	0	0	134	37
Future Vol, veh/h	37	0	1	0	0	1	2	183	0	0	134	37
Conflicting Peds, #/hr	1	0	1	1	0	1	1	0	1	1	0	1
Sign Control	Stop	Stop	Stop	Stop	Stop	Stop	Free	Free	Free	Free	Free	Free
RT Channelized	-	-	None	-	-	None	-	-	None	-	-	None
Storage Length	-	-	-	-	-	-	-	-	-	-	-	-
Veh in Median Storage, #	-	0	-	-	0	-	-	0	-	-	0	-
Grade, %	-	0	-	-	0	-	-	0	-	-	0	-
Peak Hour Factor	88	88	88	88	88	88	88	88	88	88	88	88
Heavy Vehicles, %	0	0	0	0	0	0	0	0	0	0	0	0
Mvmt Flow	42	0	1	0	0	1	2	208	0	0	152	42

Major/Minor	Minor2			Minor1			Major1			Major2		
Conflicting Flow All	388	388	175	367	409	210	195	0	0	209	0	0
Stage 1	174	174	-	214	214	-	-	-	-	-	-	-
Stage 2	214	214	-	153	195	-	-	-	-	-	-	-
Critical Hdwy	7.1	6.5	6.2	7.1	6.5	6.2	4.1	-	-	4.1	-	-
Critical Hdwy Stg 1	6.1	5.5	-	6.1	5.5	-	-	-	-	-	-	-
Critical Hdwy Stg 2	6.1	5.5	-	6.1	5.5	-	-	-	-	-	-	-
Follow-up Hdwy	3.5	4	3.3	3.5	4	3.3	2.2	-	-	2.2	-	-
Pot Cap-1 Maneuver	575	550	873	593	535	835	1390	-	-	1374	-	-
Stage 1	832	759	-	793	730	-	-	-	-	-	-	-
Stage 2	793	730	-	854	743	-	-	-	-	-	-	-
Platoon blocked, %								-	-		-	-
Mov Cap-1 Maneuver	572	548	872	590	533	834	1388	-	-	1373	-	-
Mov Cap-2 Maneuver	572	548	-	590	533	-	-	-	-	-	-	-
Stage 1	831	758	-	791	728	-	-	-	-	-	-	-
Stage 2	790	728	-	852	742	-	-	-	-	-	-	-

Approach	EB	WB	NB	SB
HCM Control Delay, s/v	11.74	9.32	0.08	0
HCM LOS	B	A		

Minor Lane/Major Mvmt	NBL	NBT	NBR	EBLn1	WBLn1	SBL	SBT	SBR
Capacity (veh/h)	19	-	-	577	834	1373	-	-
HCM Lane V/C Ratio	0.002	-	-	0.075	0.001	-	-	-
HCM Control Delay (s/veh)	7.6	0	-	11.7	9.3	0	-	-
HCM Lane LOS	A	A	-	B	A	A	-	-
HCM 95th %tile Q(veh)	0	-	-	0.2	0	0	-	-

Intersection	
Int Delay, s/veh	2.4

Movement	WBL	WBR	NBT	NBR	SBL	SBT
Lane Configurations						
Traffic Vol, veh/h	10	112	415	15	81	345
Future Vol, veh/h	10	112	415	15	81	345
Conflicting Peds, #/hr	1	1	0	1	1	0
Sign Control	Stop	Stop	Free	Free	Free	Free
RT Channelized	-	None	-	None	-	None
Storage Length	0	-	-	-	-	-
Veh in Median Storage, #	0	-	0	-	-	0
Grade, %	0	-	0	-	-	0
Peak Hour Factor	93	93	93	93	93	93
Heavy Vehicles, %	3	3	0	0	0	0
Mvmt Flow	11	120	446	16	87	371

Major/Minor	Minor1		Major1		Major2	
Conflicting Flow All	1001	456	0	0	463	0
Stage 1	455	-	-	-	-	-
Stage 2	546	-	-	-	-	-
Critical Hdwy	6.43	6.23	-	-	4.1	-
Critical Hdwy Stg 1	5.43	-	-	-	-	-
Critical Hdwy Stg 2	5.43	-	-	-	-	-
Follow-up Hdwy	3.527	3.327	-	-	2.2	-
Pot Cap-1 Maneuver	268	602	-	-	1108	-
Stage 1	637	-	-	-	-	-
Stage 2	578	-	-	-	-	-
Platoon blocked, %			-	-		-
Mov Cap-1 Maneuver	241	601	-	-	1107	-
Mov Cap-2 Maneuver	241	-	-	-	-	-
Stage 1	636	-	-	-	-	-
Stage 2	521	-	-	-	-	-

Approach	WB	NB	SB
HCM Control Delay, s/v	13.89	0	1.62
HCM LOS	B		

Minor Lane/Major Mvmt	NBT	NBR	WBLn1	SBL	SBT
Capacity (veh/h)	-	-	535	342	-
HCM Lane V/C Ratio	-	-	0.245	0.079	-
HCM Control Delay (s/veh)	-	-	13.9	8.5	0
HCM Lane LOS	-	-	B	A	A
HCM 95th %tile Q(veh)	-	-	1	0.3	-

Movement	EBL	EBT	EBR	WBL	WBT	WBR	NBL	NBT	NBR	SBL	SBT	SBR
Lane Configurations												
Traffic Volume (vph)	75	375	65	0	0	0	45	161	321	25	356	410
Future Volume (vph)	75	375	65	0	0	0	45	161	321	25	356	410
Ideal Flow (vphpl)	1900	1900	1900	1900	1900	1900	1900	1900	1900	1900	1900	1900
Total Lost time (s)		8.5	8.5				5.5	5.5		5.9	5.5	5.5
Lane Util. Factor		1.00	1.00				1.00	1.00		1.00	1.00	1.00
Frpb, ped/bikes		1.00	0.97				1.00	0.97		1.00	1.00	1.00
Flpb, ped/bikes		1.00	1.00				0.99	1.00		1.00	1.00	1.00
Frt		1.00	0.85				1.00	0.90		1.00	1.00	0.85
Flt Protected		0.99	1.00				0.95	1.00		0.95	1.00	1.00
Satd. Flow (prot)		1884	1572				1798	1669		1805	1900	1615
Flt Permitted		0.99	1.00				0.53	1.00		0.19	1.00	1.00
Satd. Flow (perm)		1884	1572				1016	1669		368	1900	1615
Peak-hour factor, PHF	0.94	0.94	0.94	0.94	0.94	0.94	0.94	0.94	0.94	0.94	0.94	0.94
Adj. Flow (vph)	80	399	69	0	0	0	48	171	341	27	379	436
RTOR Reduction (vph)	0	0	46	0	0	0	0	60	0	0	0	213
Lane Group Flow (vph)	0	479	23	0	0	0	48	452	0	27	379	223
Confl. Peds. (#/hr)			3	6		3	3		6	3		
Heavy Vehicles (%)	0%	0%	0%	0%	0%	0%	0%	0%	0%	0%	0%	0%
Turn Type	Perm	NA	Perm				Perm	NA		pm+pt	NA	Perm
Protected Phases		4						2		1	6	
Permitted Phases	4		4				2			6		6
Actuated Green, G (s)		34.3	34.3				34.1	34.1		47.4	47.4	47.4
Effective Green, g (s)		31.3	31.3				34.1	34.1		47.4	47.4	47.4
Actuated g/C Ratio		0.34	0.34				0.37	0.37		0.51	0.51	0.51
Clearance Time (s)		5.5	5.5				5.5	5.5		5.9	5.5	5.5
Vehicle Extension (s)		6.0	6.0				3.0	3.0		3.0	3.0	3.0
Lane Grp Cap (vph)		636	530				373	613		302	971	825
v/s Ratio Prot								c0.27		0.01	c0.20	
v/s Ratio Perm		0.25	0.01				0.05			0.04		0.14
v/c Ratio		0.75	0.04				0.12	0.73		0.08	0.39	0.27
Uniform Delay, d1		27.2	20.6				19.4	25.4		14.3	13.8	12.8
Progression Factor		1.00	1.00				1.00	1.00		0.96	0.92	0.76
Incremental Delay, d2		6.6	0.0				0.1	4.6		0.1	0.2	0.1
Delay (s)		33.8	20.7				19.5	30.0		14.0	13.0	9.9
Level of Service		C	C				B	C		B	B	A
Approach Delay (s/veh)		32.2			0.0			29.1			11.4	
Approach LOS		C			A			C			B	

Intersection Summary			
HCM 2000 Control Delay (s/veh)	22.4	HCM 2000 Level of Service	C
HCM 2000 Volume to Capacity ratio	0.73		
Actuated Cycle Length (s)	92.7	Sum of lost time (s)	19.9
Intersection Capacity Utilization	79.6%	ICU Level of Service	D
Analysis Period (min)	15		

c Critical Lane Group

Movement	EBL	EBR	NBL	NBT	SBT	SBR
Lane Configurations						
Traffic Volume (vph)	1	169	0	241	617	0
Future Volume (vph)	1	169	0	241	617	0
Ideal Flow (vphpl)	1900	1900	1900	1900	1900	1900
Total Lost time (s)	5.9	5.9		5.5	5.5	
Lane Util. Factor	1.00	1.00		1.00	0.95	
Frt	1.00	0.85		1.00	1.00	
Flt Protected	0.95	1.00		1.00	1.00	
Satd. Flow (prot)	1805	1615		1900	3610	
Flt Permitted	0.95	1.00		1.00	1.00	
Satd. Flow (perm)	1805	1615		1900	3610	
Peak-hour factor, PHF	0.93	0.93	0.93	0.93	0.93	0.93
Adj. Flow (vph)	1	182	0	259	663	0
RTOR Reduction (vph)	0	167	0	0	0	0
Lane Group Flow (vph)	1	15	0	259	663	0
Heavy Vehicles (%)	0%	0%	0%	0%	0%	0%
Turn Type	Prot	Perm		NA	NA	
Protected Phases	1			2 4	2 4	
Permitted Phases		1				
Actuated Green, G (s)	7.4	7.4		73.9	73.9	
Effective Green, g (s)	7.4	7.4		73.9	73.9	
Actuated g/C Ratio	0.08	0.08		0.80	0.80	
Clearance Time (s)	5.9	5.9				
Vehicle Extension (s)	3.0	3.0				
Lane Grp Cap (vph)	144	128		1514	2877	
v/s Ratio Prot	0.00			0.14	c0.18	
v/s Ratio Perm		c0.01				
v/c Ratio	0.00	0.11		0.17	0.23	
Uniform Delay, d1	39.2	39.6		2.2	2.3	
Progression Factor	1.00	1.00		0.14	1.00	
Incremental Delay, d2	0.0	0.3		0.0	0.0	
Delay (s)	39.2	39.9		0.3	2.3	
Level of Service	D	D		A	A	
Approach Delay (s/veh)	39.9			0.3	2.3	
Approach LOS	D			A	A	

Intersection Summary			
HCM 2000 Control Delay (s/veh)	8.1	HCM 2000 Level of Service	A
HCM 2000 Volume to Capacity ratio	0.24		
Actuated Cycle Length (s)	92.7	Sum of lost time (s)	16.9
Intersection Capacity Utilization	37.0%	ICU Level of Service	A
Analysis Period (min)	15		
c Critical Lane Group			

Movement	EBL	EBT	EBR	WBL	WBT	WBR	NBL	NBT	NBR	SBL	SBT	SBR
Lane Configurations												
Traffic Volume (veh/h)	0	0	0	612	5	4	231	5	0	0	5	3
Future Volume (veh/h)	0	0	0	612	5	4	231	5	0	0	5	3
Initial Q (Qb), veh				0	0	0	0	0	0	0	0	0
Lane Width Adj.				1.00	1.00	1.00	1.00	1.00	1.00	1.00	1.00	1.00
Ped-Bike Adj(A_pbT)				1.00		1.00	1.00		1.00	1.00		1.00
Parking Bus, Adj				1.00	1.00	1.00	1.00	1.00	1.00	1.00	1.00	1.00
Work Zone On Approach					No			No			No	
Adj Sat Flow, veh/h/ln				1900	1900	1900	1900	1900	0	0	1900	1900
Adj Flow Rate, veh/h				658	5	4	248	5	0	0	5	3
Peak Hour Factor				0.93	0.93	0.93	0.93	0.93	0.93	0.93	0.93	0.93
Percent Heavy Veh, %				0	0	0	0	0	0	0	0	0
Cap, veh/h				763	6	5	493	7	0	0	263	158
Arrive On Green				0.50	0.43	0.50	0.24	0.24	0.00	0.00	0.24	0.24
Sat Flow, veh/h				1784	14	11	1382	28	0	0	1110	666
Grp Volume(v), veh/h				667	0	0	253	0	0	0	0	8
Grp Sat Flow(s),veh/h/ln				1809	0	0	1410	0	0	0	0	1777
Q Serve(g_s), s				13.9	0.0	0.0	7.1	0.0	0.0	0.0	0.0	0.1
Cycle Q Clear(g_c), s				13.9	0.0	0.0	7.2	0.0	0.0	0.0	0.0	0.1
Prop In Lane				0.99		0.01	0.98		0.00	0.00		0.37
Lane Grp Cap(c), veh/h				773	0	0	500	0	0	0	0	420
V/C Ratio(X)				0.86	0.00	0.00	0.51	0.00	0.00	0.00	0.00	0.02
Avail Cap(c_a), veh/h				1312	0	0	979	0	0	0	0	1015
HCM Platoon Ratio				1.00	1.00	1.00	1.00	1.00	1.00	1.00	1.00	1.00
Upstream Filter(I)				1.00	0.00	0.00	1.00	0.00	0.00	0.00	0.00	1.00
Uniform Delay (d), s/veh				9.7	0.0	0.0	15.3	0.0	0.0	0.0	0.0	12.6
Incr Delay (d2), s/veh				3.8	0.0	0.0	0.8	0.0	0.0	0.0	0.0	0.0
Initial Q Delay(d3), s/veh				0.0	0.0	0.0	0.0	0.0	0.0	0.0	0.0	0.0
%ile BackOfQ(50%),veh/ln				4.2	0.0	0.0	2.0	0.0	0.0	0.0	0.0	0.1
Unsig. Movement Delay, s/veh												
LnGrp Delay(d), s/veh				13.4	0.0	0.0	16.1	0.0	0.0	0.0	0.0	12.6
LnGrp LOS				B			B					B
Approach Vol, veh/h					667			253			8	
Approach Delay, s/veh					13.4			16.1			12.6	
Approach LOS					B			B			B	

Timer - Assigned Phs	4	6	8
Phs Duration (G+Y+Rc), s	15.6	27.2	15.6
Change Period (Y+Rc), s	5.5	5.9	5.5
Max Green Setting (Gmax), s	24.5	34.1	24.5
Max Q Clear Time (g_c+I1), s	2.1	15.9	9.2
Green Ext Time (p_c), s	0.0	5.4	1.2

Intersection Summary	
HCM 7th Control Delay, s/veh	14.2
HCM 7th LOS	B

Notes

User approved pedestrian interval to be less than phase max green.

Intersection	
Int Delay, s/veh	4

Movement	EBT	EBR	WBL	WBT	NBL	NBR
Lane Configurations						
Traffic Vol, veh/h	15	76	1	25	83	1
Future Vol, veh/h	15	76	1	25	83	1
Conflicting Peds, #/hr	0	0	0	0	0	0
Sign Control	Free	Free	Free	Free	Stop	Stop
RT Channelized	-	None	-	None	-	None
Storage Length	-	-	0	-	0	-
Veh in Median Storage, #	0	-	-	0	0	-
Grade, %	0	-	-	0	0	-
Peak Hour Factor	84	84	84	84	84	84
Heavy Vehicles, %	2	2	7	7	0	0
Mvmt Flow	18	90	1	30	99	1

Major/Minor	Major1		Major2		Minor1	
Conflicting Flow All	0	0	108	0	95	63
Stage 1	-	-	-	-	63	-
Stage 2	-	-	-	-	32	-
Critical Hdwy	-	-	4.17	-	6.4	6.2
Critical Hdwy Stg 1	-	-	-	-	5.4	-
Critical Hdwy Stg 2	-	-	-	-	5.4	-
Follow-up Hdwy	-	-	2.263	-	3.5	3.3
Pot Cap-1 Maneuver	-	-	1452	-	909	1007
Stage 1	-	-	-	-	965	-
Stage 2	-	-	-	-	996	-
Platoon blocked, %	-	-		-		
Mov Cap-1 Maneuver	-	-	1452	-	908	1007
Mov Cap-2 Maneuver	-	-	-	-	908	-
Stage 1	-	-	-	-	965	-
Stage 2	-	-	-	-	995	-

Approach	EB	WB	NB
HCM Control Delay, s/v	0	0.29	9.45
HCM LOS			A

Minor Lane/Major Mvmt	NBLn1	EBT	EBR	WBL	WBT
Capacity (veh/h)	909	-	-	69	-
HCM Lane V/C Ratio	0.11	-	-	0.001	-
HCM Control Delay (s/veh)	9.4	-	-	7.5	0
HCM Lane LOS	A	-	-	A	A
HCM 95th %tile Q(veh)	0.4	-	-	0	-

Intersection	
Int Delay, s/veh	1.1

Movement	EBL	EBT	EBR	WBL	WBT	WBR	NBL	NBT	NBR	SBL	SBT	SBR
Lane Configurations												
Traffic Vol, veh/h	36	0	2	0	1	2	0	152	1	0	182	42
Future Vol, veh/h	36	0	2	0	1	2	0	152	1	0	182	42
Conflicting Peds, #/hr	1	0	1	0	0	0	1	0	0	0	0	1
Sign Control	Stop	Stop	Stop	Stop	Stop	Stop	Free	Free	Free	Free	Free	Free
RT Channelized	-	-	None	-	-	None	-	-	None	-	-	None
Storage Length	-	-	-	-	-	-	-	-	-	-	-	-
Veh in Median Storage, #	-	0	-	-	0	-	-	0	-	-	0	-
Grade, %	-	0	-	-	0	-	-	0	-	-	0	-
Peak Hour Factor	90	90	90	90	90	90	90	90	90	90	90	90
Heavy Vehicles, %	0	0	0	0	0	0	0	0	0	0	0	0
Mvmt Flow	40	0	2	0	1	2	0	169	1	0	202	47

Major/Minor	Minor2			Minor1			Major1			Major2		
Conflicting Flow All	397	397	228	373	419	170	250	0	0	170	0	0
Stage 1	227	227	-	169	169	-	-	-	-	-	-	-
Stage 2	170	170	-	203	250	-	-	-	-	-	-	-
Critical Hdwy	7.1	6.5	6.2	7.1	6.5	6.2	4.1	-	-	4.1	-	-
Critical Hdwy Stg 1	6.1	5.5	-	6.1	5.5	-	-	-	-	-	-	-
Critical Hdwy Stg 2	6.1	5.5	-	6.1	5.5	-	-	-	-	-	-	-
Follow-up Hdwy	3.5	4	3.3	3.5	4	3.3	2.2	-	-	2.2	-	-
Pot Cap-1 Maneuver	567	544	817	588	528	879	1327	-	-	1420	-	-
Stage 1	781	720	-	837	762	-	-	-	-	-	-	-
Stage 2	836	762	-	803	704	-	-	-	-	-	-	-
Platoon blocked, %								-	-		-	-
Mov Cap-1 Maneuver	563	543	815	586	528	878	1326	-	-	1420	-	-
Mov Cap-2 Maneuver	563	543	-	586	528	-	-	-	-	-	-	-
Stage 1	780	719	-	837	762	-	-	-	-	-	-	-
Stage 2	832	762	-	800	703	-	-	-	-	-	-	-

Approach	EB	WB	NB	SB
HCM Control Delay, s/v	11.79	10.03	0	0
HCM LOS	B	B		

Minor Lane/Major Mvmt	NBL	NBT	NBR	EBLn1	WBLn1	SBL	SBT	SBR
Capacity (veh/h)	1326	-	-	572	719	1420	-	-
HCM Lane V/C Ratio	-	-	-	0.074	0.005	-	-	-
HCM Control Delay (s/veh)	0	-	-	11.8	10	0	-	-
HCM Lane LOS	A	-	-	B	B	A	-	-
HCM 95th %tile Q(veh)	0	-	-	0.2	0	0	-	-

Intersection	
Int Delay, s/veh	2.4

Movement	WBL	WBR	NBT	NBR	SBL	SBT
Lane Configurations						
Traffic Vol, veh/h	14	111	360	13	50	375
Future Vol, veh/h	14	111	360	13	50	375
Conflicting Peds, #/hr	3	3	0	3	3	0
Sign Control	Stop	Stop	Free	Free	Free	Free
RT Channelized	-	None	-	None	-	None
Storage Length	0	-	-	-	-	-
Veh in Median Storage, #	0	-	0	-	-	0
Grade, %	0	-	0	-	-	0
Peak Hour Factor	85	85	85	85	85	85
Heavy Vehicles, %	0	0	0	0	0	0
Mvmt Flow	16	131	424	15	59	441

Major/Minor	Minor1		Major1		Major2	
Conflicting Flow All	996	437	0	0	442	0
Stage 1	434	-	-	-	-	-
Stage 2	562	-	-	-	-	-
Critical Hdwy	6.4	6.2	-	-	4.1	-
Critical Hdwy Stg 1	5.4	-	-	-	-	-
Critical Hdwy Stg 2	5.4	-	-	-	-	-
Follow-up Hdwy	3.5	3.3	-	-	2.2	-
Pot Cap-1 Maneuver	273	624	-	-	1129	-
Stage 1	657	-	-	-	-	-
Stage 2	575	-	-	-	-	-
Platoon blocked, %			-	-		-
Mov Cap-1 Maneuver	253	620	-	-	1126	-
Mov Cap-2 Maneuver	253	-	-	-	-	-
Stage 1	656	-	-	-	-	-
Stage 2	533	-	-	-	-	-

Approach	WB	NB	SB
HCM Control Delay, s/v	14.3	0	0.99
HCM LOS	B		

Minor Lane/Major Mvmt	NBT	NBR	WBLn1	SBL	SBT
Capacity (veh/h)	-	-	533	212	-
HCM Lane V/C Ratio	-	-	0.276	0.052	-
HCM Control Delay (s/veh)	-	-	14.3	8.4	0
HCM Lane LOS	-	-	B	A	A
HCM 95th %tile Q(veh)	-	-	1.1	0.2	-

Movement	EBL	EBT	EBR	WBL	WBT	WBR	NBL	NBT	NBR	SBL	SBT	SBR
Lane Configurations												
Traffic Volume (vph)	50	340	90	0	0	0	86	160	235	20	320	530
Future Volume (vph)	50	340	90	0	0	0	86	160	235	20	320	530
Ideal Flow (vphpl)	1900	1900	1900	1900	1900	1900	1900	1900	1900	1900	1900	1900
Total Lost time (s)		8.5	8.5				5.5	5.5		5.9	5.5	5.5
Lane Util. Factor		1.00	1.00				1.00	1.00		1.00	1.00	1.00
Frpb, ped/bikes		1.00	0.97				1.00	0.98		1.00	1.00	1.00
Flpb, ped/bikes		1.00	1.00				0.99	1.00		1.00	1.00	1.00
Frt		1.00	0.85				1.00	0.91		1.00	1.00	0.85
Flt Protected		0.99	1.00				0.95	1.00		0.95	1.00	1.00
Satd. Flow (prot)		1888	1576				1800	1697		1805	1900	1615
Flt Permitted		0.99	1.00				0.55	1.00		0.26	1.00	1.00
Satd. Flow (perm)		1888	1576				1050	1697		497	1900	1615
Peak-hour factor, PHF	0.93	0.93	0.93	0.93	0.93	0.93	0.93	0.93	0.93	0.93	0.93	0.93
Adj. Flow (vph)	54	366	97	0	0	0	92	172	253	22	344	570
RTOR Reduction (vph)	0	0	53	0	0	0	0	45	0	0	0	284
Lane Group Flow (vph)	0	420	44	0	0	0	92	380	0	22	344	286
Confl. Peds. (#/hr)			2	5		3	2		5	3		
Heavy Vehicles (%)	0%	0%	0%	0%	0%	0%	0%	0%	0%	0%	0%	0%
Turn Type	Perm	NA	Perm				Perm	NA		pm+pt	NA	Perm
Protected Phases		4						2		1	6	
Permitted Phases	4		4				2			6		6
Actuated Green, G (s)		33.1	33.1				31.0	31.0		44.3	44.3	44.3
Effective Green, g (s)		30.1	30.1				31.0	31.0		44.3	44.3	44.3
Actuated g/C Ratio		0.34	0.34				0.35	0.35		0.50	0.50	0.50
Clearance Time (s)		5.5	5.5				5.5	5.5		5.9	5.5	5.5
Vehicle Extension (s)		6.0	6.0				3.0	3.0		3.0	3.0	3.0
Lane Grp Cap (vph)		642	536				368	595		358	952	809
v/s Ratio Prot								c0.22		0.01	c0.18	
v/s Ratio Perm		0.22	0.03				0.09			0.03		0.18
v/c Ratio		0.65	0.08				0.25	0.63		0.06	0.36	0.35
Uniform Delay, d1		24.7	19.7				20.4	24.0		13.0	13.4	13.3
Progression Factor		1.00	1.00				1.00	1.00		0.97	0.93	0.94
Incremental Delay, d2		3.8	0.1				0.3	2.2		0.0	0.2	0.2
Delay (s)		28.5	19.9				20.7	26.2		12.8	12.7	12.8
Level of Service		C	B				C	C		B	B	B
Approach Delay (s/veh)		26.9			0.0			25.2			12.8	
Approach LOS		C			A			C			B	

Intersection Summary			
HCM 2000 Control Delay (s/veh)	19.8	HCM 2000 Level of Service	B
HCM 2000 Volume to Capacity ratio	0.63		
Actuated Cycle Length (s)	88.4	Sum of lost time (s)	19.9
Intersection Capacity Utilization	71.2%	ICU Level of Service	C
Analysis Period (min)	15		

c Critical Lane Group

Movement	EBL	EBR	NBL	NBT	SBT	SBR
Lane Configurations						
Traffic Volume (vph)	1	171	0	215	714	0
Future Volume (vph)	1	171	0	215	714	0
Ideal Flow (vphpl)	1900	1900	1900	1900	1900	1900
Total Lost time (s)	5.9	5.9		5.5	5.5	
Lane Util. Factor	1.00	1.00		1.00	0.95	
Frt	1.00	0.85		1.00	1.00	
Flt Protected	0.95	1.00		1.00	1.00	
Satd. Flow (prot)	1805	1615		1900	3610	
Flt Permitted	0.95	1.00		1.00	1.00	
Satd. Flow (perm)	1805	1615		1900	3610	
Peak-hour factor, PHF	0.95	0.95	0.95	0.95	0.95	0.95
Adj. Flow (vph)	1	180	0	226	752	0
RTOR Reduction (vph)	0	165	0	0	0	0
Lane Group Flow (vph)	1	15	0	226	752	0
Heavy Vehicles (%)	0%	0%	0%	0%	0%	0%
Turn Type	Prot	Perm		NA	NA	
Protected Phases	1			2 4	2 4	
Permitted Phases		1				
Actuated Green, G (s)	7.4	7.4		69.6	69.6	
Effective Green, g (s)	7.4	7.4		69.6	69.6	
Actuated g/C Ratio	0.08	0.08		0.79	0.79	
Clearance Time (s)	5.9	5.9				
Vehicle Extension (s)	3.0	3.0				
Lane Grp Cap (vph)	151	135		1495	2842	
v/s Ratio Prot	0.00			0.12	c0.21	
v/s Ratio Perm		c0.01				
v/c Ratio	0.00	0.11		0.15	0.26	
Uniform Delay, d1	37.1	37.4		2.2	2.5	
Progression Factor	1.00	1.00		0.11	1.00	
Incremental Delay, d2	0.0	0.3		0.0	0.0	
Delay (s)	37.1	37.8		0.2	2.5	
Level of Service	D	D		A	A	
Approach Delay (s/veh)	37.8			0.2	2.5	
Approach LOS	D			A	A	

Intersection Summary			
HCM 2000 Control Delay (s/veh)	7.6	HCM 2000 Level of Service	A
HCM 2000 Volume to Capacity ratio	0.27		
Actuated Cycle Length (s)	88.4	Sum of lost time (s)	16.9
Intersection Capacity Utilization	39.8%	ICU Level of Service	A
Analysis Period (min)	15		
c Critical Lane Group			

Movement	EBL	EBT	EBR	WBL	WBT	WBR	NBL	NBT	NBR	SBL	SBT	SBR
Lane Configurations												
Traffic Volume (veh/h)	0	0	0	709	5	1	215	3	0	0	3	3
Future Volume (veh/h)	0	0	0	709	5	1	215	3	0	0	3	3
Initial Q (Qb), veh				0	0	0	0	0	0	0	0	0
Lane Width Adj.				1.00	1.00	1.00	1.00	1.00	1.00	1.00	1.00	1.00
Ped-Bike Adj(A_pbT)				1.00		1.00	1.00		1.00	1.00		1.00
Parking Bus, Adj				1.00	1.00	1.00	1.00	1.00	1.00	1.00	1.00	1.00
Work Zone On Approach					No			No			No	
Adj Sat Flow, veh/h/ln				1900	1900	1900	1900	1900	0	0	1900	1900
Adj Flow Rate, veh/h				716	5	1	217	3	0	0	3	3
Peak Hour Factor				0.99	0.99	0.99	0.99	0.99	0.99	0.99	0.99	0.99
Percent Heavy Veh, %				0	0	0	0	0	0	0	0	0
Cap, veh/h				826	6	1	452	4	0	0	177	177
Arrive On Green				0.53	0.46	0.53	0.20	0.20	0.00	0.00	0.20	0.20
Sat Flow, veh/h				1795	13	3	1398	19	0	0	872	872
Grp Volume(v), veh/h				722	0	0	220	0	0	0	0	6
Grp Sat Flow(s),veh/h/ln				1810	0	0	1418	0	0	0	0	1743
Q Serve(g_s), s				14.9	0.0	0.0	6.2	0.0	0.0	0.0	0.0	0.1
Cycle Q Clear(g_c), s				14.9	0.0	0.0	6.3	0.0	0.0	0.0	0.0	0.1
Prop In Lane				0.99		0.00	0.99		0.00	0.00		0.50
Lane Grp Cap(c), veh/h				833	0	0	456	0	0	0	0	355
V/C Ratio(X)				0.87	0.00	0.00	0.48	0.00	0.00	0.00	0.00	0.02
Avail Cap(c_a), veh/h				1314	0	0	985	0	0	0	0	997
HCM Platoon Ratio				1.00	1.00	1.00	1.00	1.00	1.00	1.00	1.00	1.00
Upstream Filter(I)				1.00	0.00	0.00	1.00	0.00	0.00	0.00	0.00	1.00
Uniform Delay (d), s/veh				8.9	0.0	0.0	16.2	0.0	0.0	0.0	0.0	13.6
Incr Delay (d2), s/veh				4.4	0.0	0.0	0.8	0.0	0.0	0.0	0.0	0.0
Initial Q Delay(d3), s/veh				0.0	0.0	0.0	0.0	0.0	0.0	0.0	0.0	0.0
%ile BackOfQ(50%),veh/ln				4.4	0.0	0.0	1.8	0.0	0.0	0.0	0.0	0.0
Unsig. Movement Delay, s/veh												
LnGrp Delay(d), s/veh				13.3	0.0	0.0	16.9	0.0	0.0	0.0	0.0	13.7
LnGrp LOS				B			B					B
Approach Vol, veh/h					722			220			6	
Approach Delay, s/veh					13.3			16.9			13.7	
Approach LOS					B			B			B	

Timer - Assigned Phs	4	6	8
Phs Duration (G+Y+Rc), s	14.2	28.6	14.2
Change Period (Y+Rc), s	5.5	5.9	5.5
Max Green Setting (Gmax), s	24.5	34.1	24.5
Max Q Clear Time (g_c+I1), s	2.1	16.9	8.3
Green Ext Time (p_c), s	0.0	5.9	1.1

Intersection Summary	
HCM 7th Control Delay, s/veh	14.2
HCM 7th LOS	B

Notes

User approved pedestrian interval to be less than phase max green.

Intersection	
Int Delay, s/veh	6.2

Movement	EBT	EBR	WBL	WBT	NBL	NBR
Lane Configurations						
Traffic Vol, veh/h	2	63	0	10	110	0
Future Vol, veh/h	2	63	0	10	110	0
Conflicting Peds, #/hr	0	6	3	0	6	3
Sign Control	Free	Free	Free	Free	Stop	Stop
RT Channelized	-	None	-	None	-	None
Storage Length	-	-	0	-	0	-
Veh in Median Storage, #	0	-	-	0	0	-
Grade, %	0	-	-	0	0	-
Peak Hour Factor	47	47	47	47	47	47
Heavy Vehicles, %	0	0	0	0	0	0
Mvmt Flow	4	134	0	21	234	0

Major/Minor	Major1		Major2		Minor1	
Conflicting Flow All	0	0	144	0	105	80
Stage 1	-	-	-	-	77	-
Stage 2	-	-	-	-	27	-
Critical Hdwy	-	-	4.1	-	6.4	6.2
Critical Hdwy Stg 1	-	-	-	-	5.4	-
Critical Hdwy Stg 2	-	-	-	-	5.4	-
Follow-up Hdwy	-	-	2.2	-	3.5	3.3
Pot Cap-1 Maneuver	-	-	1450	-	898	985
Stage 1	-	-	-	-	951	-
Stage 2	-	-	-	-	1000	-
Platoon blocked, %	-	-		-		
Mov Cap-1 Maneuver	-	-	1442	-	888	977
Mov Cap-2 Maneuver	-	-	-	-	888	-
Stage 1	-	-	-	-	945	-
Stage 2	-	-	-	-	995	-

Approach	EB	WB	NB
HCM Control Delay, s/v	0	0	10.5
HCM LOS			B

Minor Lane/Major Mvmt	NBLn1	EBT	EBR	WBL	WBT
Capacity (veh/h)	888	-	-	1442	-
HCM Lane V/C Ratio	0.264	-	-	-	-
HCM Control Delay (s/veh)	10.5	-	-	0	-
HCM Lane LOS	B	-	-	A	-
HCM 95th %tile Q(veh)	1.1	-	-	0	-

Appendix D: Trip Generation Calculations

Attachment B: Trip Generation

Herzl Private School

Proposed Use									Gross Trips			Total Net New		
Land Use	Setting	Size	Units	Model	Equation	Rate	Units	Inbound %	Inbound	Outbound	Subtotal	Inbound	Outbound	Total
Private School (K-8) (LU 530)		**150**	students											
School Peak Hour				Equation (log)	ln(T) = 0.98*ln(x)-0.38	-	-	47%	44	50	94	44	50	94
AM Peak Hour				Equation (lin)	T = 1.11x - 40.99	-	-	56%	71	55	126	71	55	126
PM Peak Hour				Rate	-	0.26	per student	46%	18	21	39	18	21	39
General Office Building (LU 710)		**12,300**	sf											
School Peak Hour				Equation (log)	ln(T) = 0.87*ln(x)+3.05	-	-	50%	7	8	15	7	8	15
AM Peak Hour				Equation (log)	ln(T) = 0.86*ln(x)+1.16	-	-	88%	25	3	28	25	3	28
PM Peak Hour				Equation (log)	ln(T) = 0.83*ln(x)+1.29	-	-	17%	5	24	29	5	24	29
Subtotal														
PM Peak Hour of Generator									51	58	109	51	58	109
AM Peak Hour									96	58	154	96	58	154
PM Peak Hour									23	45	68	23	45	68

Net New Trips			
PM Peak Hour of Generator	51	58	109
AM Peak Hour	96	58	154
PM Peak Hour	23	45	68

Notes:

1. Trip rates based on Institute of Transportation Engineers' (ITE) *Trip Generation* 11th Edition equation and average trip rate as shown above.
2. AVO = average vehicle occupancy. Retail and Residential AVO based on NCHRP 365 for urban areas with populations over 1 million people. No AVO rate if trips calculated based on person trip rate

3. School Peak Hour trips for LU 530 based on PM peak hour of generator. School Peak Hour trips for LU 710 calculated based on time of day distributions at 3-4 pm given in ITE Trip Generation 11th Edition appendices, and daily trips given from equation.
Inbound trips for school peak hour are 7.3% of 94 daily inbound trips. Outbound school peak hour trips are 8.4% of 94 daily outbound trips. Total school peak hour trips are 7.8% of 188 total daily trips